96" 4-Blade 30° Inside Frame (58" Stroke)

Machine Weight: 7000lbs [3175kg]

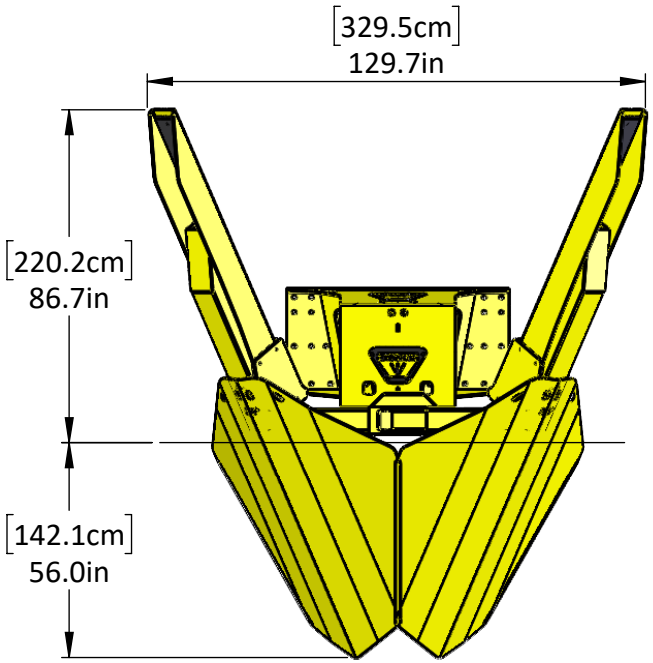

BLADES DOWN

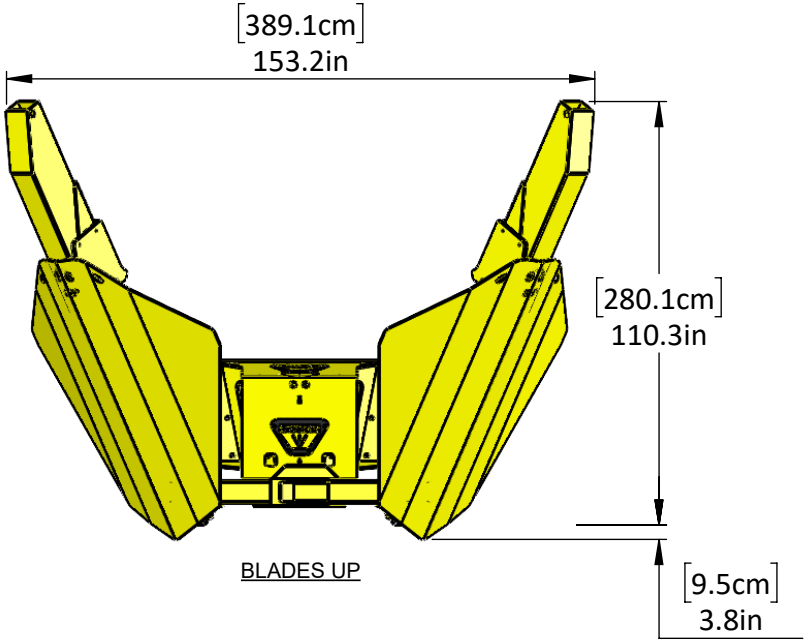

BLADES UP

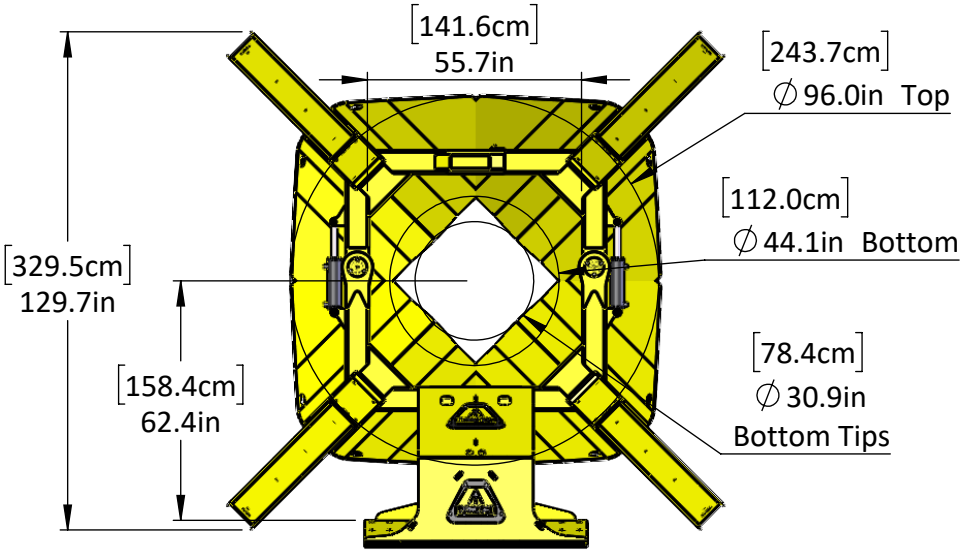

TOP VIEW

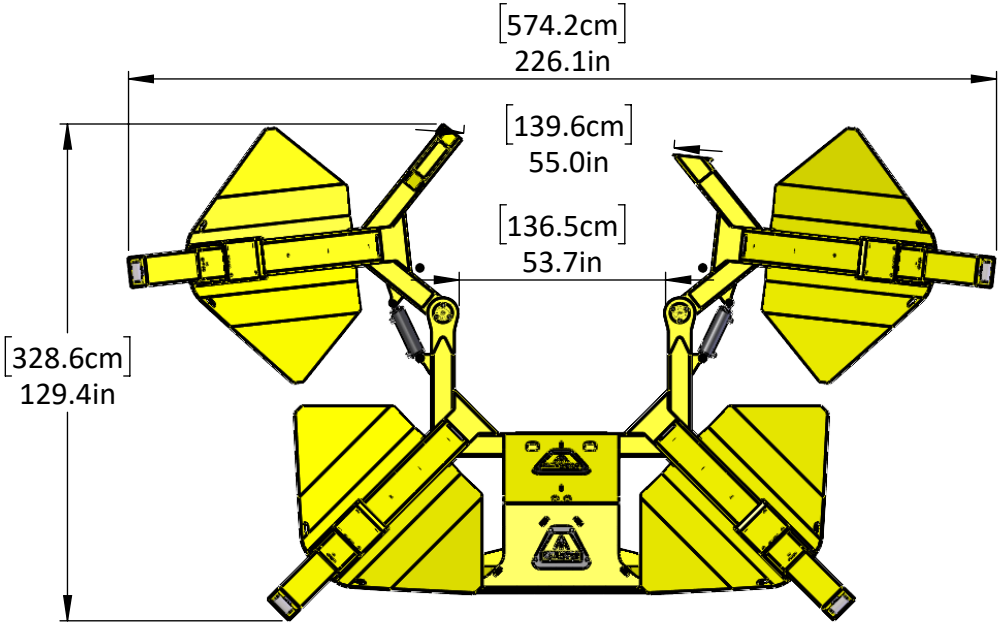

TOP VIEW - GATES OPEN