Dutchman

I N D U S T R I E S

DIVISION OF

Dutchmaster Nurseries Ltd.

Tree Spade
Owner's Manual

Manufactured and Sold by
Dutchman Industries Inc.
3735 Sideline 16, Brougham,
Ontario, Canada L0H 1A0

1.800.293.0070
1.905.683.8233

www.dutchmantreespade.com
www.dutchmantruckspade.com

Serial Number:_____
Date Of Purchase:_____

Table of Contents

DUTCHMAN TREE SPADE

SAFETY &
PROCEDURES

DUTCHMAN INDUSTRIES INC.
SAFETY INSTRUCTIONS

THESE INSTRUCTIONS ARE OF GREAT IMPORTANCE AND MUST BE READ AND FOLLOWED CAREFULLY AND OBEYED.

➔ ATTENTION: This ARROW symbol is used throughout this manual to call attention to the safety instructions.
➔ WARNING: Before attempting to operate the machine, fully read and follow all instructions herein with care.

The safety of the operator is of great importance to Dutchman Industries Inc. We have provided decals, an Operators Manual, shields, and other safety features to aid you in using your equipment safely. Be a careful operator. Properly use and service your equipment according to instructions provided in this manual.

A) BEFORE OPERATING

- Read and follow all instructions contained in:
  - -This Dutchman Equipment Manual,
  - -Loader Operators Manual,
  - -Decals placed on the equipment and loader.
  - **-Note: Additional copies of the above items are available from Dutchman Industries Inc. or your local authorized dealer.**
  - **-Note: Dutchman Industries Inc. cannot guarantee the loader, used to operate any size tree spade, will not incur strain and stress on various mechanical components whether immediate or through long term use. Any effect on the warranty of the loader is the responsibility of the operator and not Dutchman Industries Inc.**

- Be sure the unit is in good operating condition and that all safety devices are in place and secured. If they must be removed for service or maintenance, reinstall them before starting the engine.

- Allow only responsible, properly instructed individuals to operate the tree spade. Carefully supervise inexperienced operators.

- Check with proper authorities regarding the location of underground gas lines, water lines, power lines and other installations.

- Check overhead for electrical power lines and/or other obstructions and be certain there is adequate clearance.

- Check the work area for objects, which interfere with the proper operation of the equipment.

- A fire extinguisher should be available in case of fire.

B) DURING OPERATION

- *Do* ***not*** allow anyone to ride on the equipment.

- *When moving* the equipment to and from its vertical position, be aware of all height clearances.

- *Do* ***not*** attempt to use this equipment for anything other than its intended purpose.

SAFETY INSTRUCTIONS

• *Do* ***not*** deadhead the hydraulic valve control in an open position after the unit has reached the end of its stroke or has come in contact with a solid structure.

• *Keep* all others, especially children, away from the equipment.

• *Be certain* everyone is clear before opening or closing the equipment.

• *Keep* hands, feet and clothing away from all moving parts.

• *Never* allow anyone to work under the equipment. It could drop unexpectedly resulting in severe personal injury.

• Be alert and use *extreme caution* when operating on or near hillsides, ditches, gullies, holes, or obstructions where rollover could occur.

C) DURING SERVICE AND MAINTENANCE

• *Before* working on or near the equipment, for any reason including servicing, cleaning or equipment inspection, use normal shut down procedure unless instructed differently in this manual.

• *Check* periodically and tighten or replace any loose or cracked bolts, hoses or connections.

• *Use* only parts authorized by Dutchman Industries for repair or replacement.

• *Hydraulic fluid escaping under pressure* can be invisible and can have enough force to penetrate the skin. When checking for suspected leaks use a piece of wood or cardboard rather than your hands. Immediately seek medical attention if injured to prevent serious infection or reaction.

• *Relieve all pressure* in the hydraulic system before disconnecting the lines or performing other work on the system. Make sure all connections are tight and lines are in good condition before applying pressure to the system.

• Spades will drop if drive system components including hydraulic lines are disconnected when spades are raised. Before disconnecting or loosening any part of the spade drive system lower spade to ground to prevent falling.

D) WHEN TRANSPORTING

- Be courteous and obey all applicable laws governing road use.
- Be sure to properly confine tree branches. In some cases limbs may have to be removed.
- Check with proper authorities regarding maximum width and height limitations.
- Be conscious of all height clearances.

SAFETY INSTRUCTIONS

➔ **WARNING:** ***Failure to comply with the above safety instructions or those that follow within this manual could result in severe personal injury or death. This equipment is to be used only for those purposes for which it is intended as explained in the Operators Manual.***

E) SAFETY DECALS

Safety decals located on your equipment contain important and useful information that will help you operate your equipment safely.

To ensure that all decals remain in place and in good condition follow the instructions below:

1. Keep decals clean using soap and water. Do not use mineral spirits, adhesive cleansers or similar cleaners as they will damage decals.

2. Replace any damaged or missing decals. When attaching decals, surface temperature of the metal must be a minimum of 40 ○ F (5 ○ C). The metal must be clean and dry.

3. When replacing a component to which a decal is attached be sure to also replace the decal.

4. Replacement decals can be purchased from your Dutchman Industries Inc, or your local authorized dealer.

PRE-START INSPECTION INSTRUCTIONS

To ensure long life and economical operation of your equipment, we highly recommend the operator be thoroughly instructed in the maintenance and operation of the equipment. There is no substitute for a sound, preventative maintenance program and a well-trained operator.

Prior to starting the engine we recommend the operator make a visual inspection of the equipment and make any necessary adjustments and repairs. This can be done at the time of machine lubrication.

➔***WARNING: Before inspecting the equipment, use normal shutdown procedures unless instructed differently below.***

Check the following on the equipment:

- Condition of decals
- Components for signs of fatigue
- Bolts for tightness
- Grease points
- Hydraulic components for leaks or damage

➔ ***WARNING: Hydraulic fluid escaping under pressure can be invisible and can have enough force to penetrate the skin. When searching for suspected leaks use a piece of wood or cardboard, not your hands. To prevent serious infection or reaction, immediately seek medical attention if injured.***

NORMAL SHUTDOWN PROCEDURE

When stopping the equipment use the following normal shutdown procedure:

1. Lower the equipment to ground level unless mechanically suspended with suitable blocks or hoist.

2. Shut off engine.

3. Turn the key back to accessory and flip loader auxiliary oil button back and forth to relieve oil pressure to the equipment.

4. Set parking brake.

5. Remove key.

For the safety of the operator and others, use the normal shutdown procedure before servicing, cleaning or inspecting the tree spade.

A variation of the above procedure may be used if so instructed within the loader manual or if an extreme emergency requires it.

STORAGE INSTRUCTIONS

➔***WARNING: When preparing the equipment for storage, use normal shutdown procedure.***

BEFORE STORAGE

1. Clean all mud, dirt, grease and other foreign material from the exterior of the equipment. Wash it completely. Repaint places where bare metal is exposed to inhibit rust.

2. Clean the working components. It is advised to coat them with a rust preventative compound.

3. If possible, store the equipment in a dry, protected place. If storing the equipment outside, cover with waterproof canvas, plastic or other suitable protective material.

4. Lubricate the equipment thoroughly including all grease points.

5. Take the load off all hydraulic cylinders by working the valve controls back and forth. Oil all control valve linkages with a light oil to prevent seizing. Protect exposed cylinder rods with grease or Tectyl 506 oil or equivalent.

6. Check the equipment for any worn or broken parts, as well as torn or ripped decals.

7. Order parts now to prevent delays when taking the equipment out of storage for a new season.

8. When ordering parts/decals, always quote the serial number and model number of the equipment.

REMOVING FROM STORAGE

1. Remove all protective covering.
2. Tighten all loose bolts, nuts and/or hydraulic fittings.
3. Check hydraulic hoses for deterioration and replace if necessary.
4. Inspect all electrical components for oxidization and/or insect infestations.
5. Make certain working components are free of dirt inside and outside.
6. Ensure all cylinder rods are free from rust and/or pitting.
7. Refer to the pre-starting inspection instructions.

LUBRICATION INSTRUCTIONS

All Dutchman products are completely serviced at the factory before shipping. However, the operator should check all grease fittings on the unit before beginning to operate it so as to become familiar with their location and the correct service schedule.

➔***WARNING: Use the normal shut-down procedure before lubricating the equipment.***

Use only high quality, multi-purpose grease when lubricating the unit. Make sure all fittings and nozzle of the grease applicator are clean before applying the grease. If any grease fittings are missing or plugged, replace them immediately.

Ensure grease is travelling through the grease fittings. Excess grease bulging at all exit points is evidence of a full and thorough greasing.

Do not grease the inside or outside of working components which utilize wear pads, they must be kept dry and clean. Grease on these components will do more harm than good. Dirt and debris will stick to the grease and thus damage the high-density wear pads.

SERVICE AND MAINTENANCE

➔WARNING: Before servicing the tree spade, use normal shutdown procedure unless instructed differently in this section.

A) SPADES

1. The spades should be kept sharp and care should be exercised to keep the spades from bending out of shape or having the point of the spades turning over. This can happen when trying to dig where large stones or boulders are a problem. This can also happen when trying to cut tree roots which are too large for the machine to handle.

2. The spade slides should be kept as clean and dry as possible and not lubricated. Premature wear can be avoided this way.

3. Inspect all electrical plug-ends and spray with contact-cleaner to prevent oxidization.

4. Keep the tree spade lubricated as per instructions and constantly watch for loose bolts, pins and pivots.

B) HYDRAULIC COMPONENTS

➔WARNING: Spades will drop if drive system components, including hydraulic lines are disconnected while spades are raised. Before disconnecting or loosening any part of the spade drive system, lower the spade to ground to prevent falling.

➔WARNING: Release all oil pressure before starting to work on the hydraulic system. Hydraulic fluid escaping under pressure can be invisible and can have enough force to penetrate the skin. When searching for suspected leaks use a piece of wood or cardboard, not your hands. To prevent serious infection or reaction, immediately seek medical attention if injured.

The pressure available in the hydraulic system must be known, to quickly and accurately troubleshoot the system.

MOUNTING INSTRUCTIONS

GENERAL INFORMATION

The following instructions will assist you in mounting your equipment onto your loader. The majority of equipment will use a universal skid steer quick-attach hook-up.

➔WARNING: For mounting to other host machines see the specific mounting instructions that are supplied separately.

Remember to read all safety warnings, decals and operating instructions before operating.

MOUNTING PROCEDURES

1. Remove the steel shipping banding from around the equipment.

2. Remove any attachment from the front of the skid steer loader, such as buckets, forks or other implements.

3. Set the quick-attach locks on the skid steer toolbar to the unlocked position. Lower the loader arms and tilt the toolbar down low enough to pass under the top lip of the hitch on the mainframe.

4. Following all standard safety practices, start the skid steer and slowly drive it in back of the attachment. Position the loader so the top of the toolbar under the lip of the hitch on the mainframe.

5. Tilt the toolbar back to hook the attachment onto the toolbar. It may be necessary to lift the loader arms slightly.

6. Set the quick-attach locks to the locked position to secure the equipment onto the loader. It may be necessary to raise lower or tilt the toolbar to properly align so the locking mechanism can be activated. Ensure that the locking pins are fully deployed.

7. Install your rear stabilizers (if required) by following the instructions that were supplied rear stabilizers for your unit.

8. If installing rear stabilizers, connect the power and return hoses for the rear stabilizers to the two bulkhead fittings on the top of the mainframe (directly beside the power and return hoses for the tree spade). Otherwise continue to step 9.

9. With the auxiliary hydraulic system turned off, route the hydraulic hoses over the mainframe and connect them to their proper auxiliary couplers on the loader.

10. If using an electric valve, connect the cord assembly to the control cord from the equipment. Connect the power cord from the electronic controller to a power source on the skid steer.

NOTE: Some machines have an auxiliary electrical outlet to plug in the control cord, contained within the loader cab. You can connect to this but ensure the power and ground connections are plugged-in correctly.

➔ WARNING: Electrocution Hazard! Provide electrical power to the controller by following your skid steer manufacturer's recommended procedures. The electrical circuit must be fused with a 5 amp fuse to prevent machine damage and serious personal injury or death.

MOUNTING INSTRUCTIONS

11. Mount the controller; if equipped with handheld pistol grip controller, please refer to the pistol grip mounting guide on page 69.

12. Complete the included post-delivery checklist. The installation is now complete.

DUTCHMAN TREE SPADE

CONTROLS & OPERATION

DUTCHMAN INDUSTRIES INC.

CONTROLS

Your equipment is controlled either by a Dutchman pistol grip joystick or a traditional manual/cable operated valve control.

PISTOL GRIP JOYSTICK

If your equipment is equipped with a Dutchman pistol grip joystick, it is controlled by the joystick and an electrical valve assembly. The joystick control consists of 8 switches and a trigger, and is setup to handle up to four blades, two gates and rear stabilizers (if equipped).

TREE SPADE (BLADE AND GATE) PISTOL GRIP JOYSTICK CONTROLS

The joystick control can accommodate up to four blades, two gates, and rear stabilizers (if equipped) and is wired for the number of functions on the tree spade you have purchased. Pressing and holding the button on the pistol grip controller will activate the connected function: for example lowering or raising a blade, closing or opening a gate, or lower or raising the rear stabilizers. Pressing and holding both the button *and* the trigger at the same time will reverse the function, carrying out the opposite motion. When the button(s) are released all movement will stop.

PISTOL GRIP LAYOUT

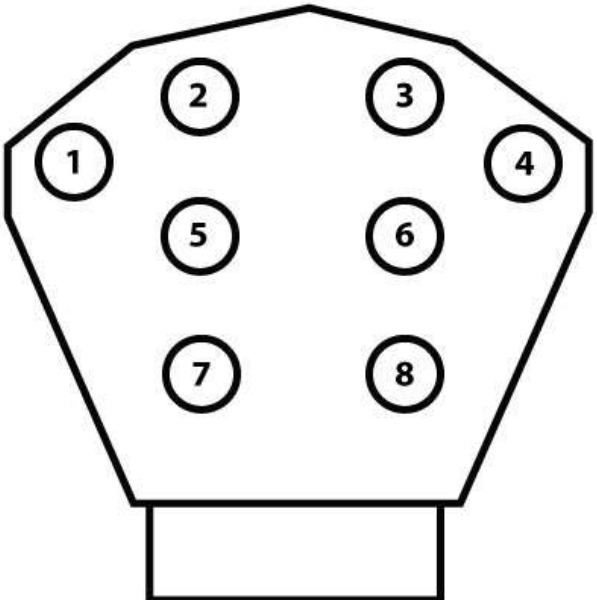

Three Blade Spade		
Button	**Function**	**Wire Colour**
1	**Blade 1**	**Yellow**
2	**Blade 2**	**Green**
3	**Blade 3**	**Blue**
4		**Orange**
5	**Gate**	**Black**
6		**White**
7	**Stabilizer**	**Brown**
8	**Spare**	***Auxiliary***

Four Blade Spade		
Button	**Function**	**Wire Colour**
1	**Blade 1**	**Yellow**
2	**Blade 2**	**Green**
3	**Blade 3**	**Blue**
4	**Blade 4**	**Orange**
5	**Gate 1**	**Black**
6	**Gate 2**	**White**
7	**Stabilizer**	**Brown**
8	**Spare**	***Auxiliary***

MANUAL CONTROL
If your equipment is equipped with a manual control system, it is controlled by a lever-operated assembly. The assembly consists of 5 levers (for a three blade spade) or 7 levers (for a four blade spade) which control all of the blade, gate and stabilizer functions.

TREE SPADE (BLADE AND GATE) MANUAL CONTROLS
Moving a lever downward or upward will operate the selected function: for example lowering or raising a blade, closing or opening a gate, or lower or raising the rear stabilizers. The length the lever is thrown controls the speed of the operation. When the lever is released all movement will stop.

MANUAL LEVER CONTROL SCHEMATICS

5-SECTION VALVE FOR 3-BLADE SPADE

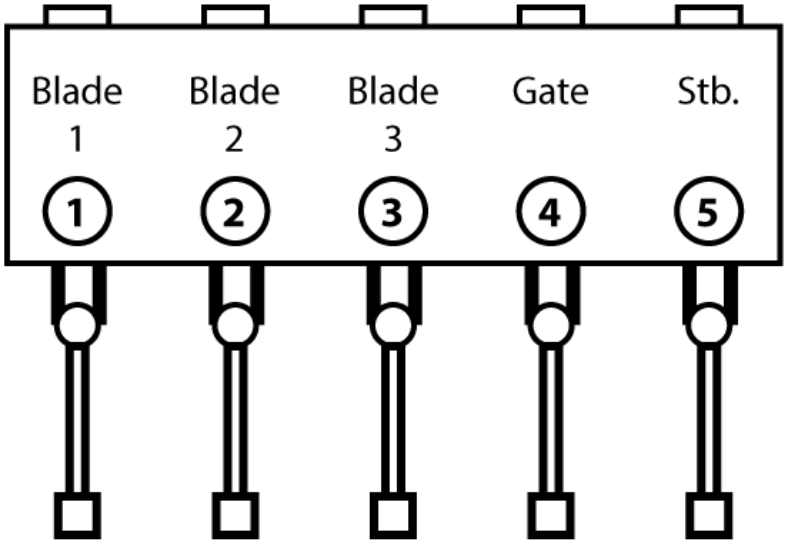

7-SECTION VALVE FOR 4-BLADE SPADE

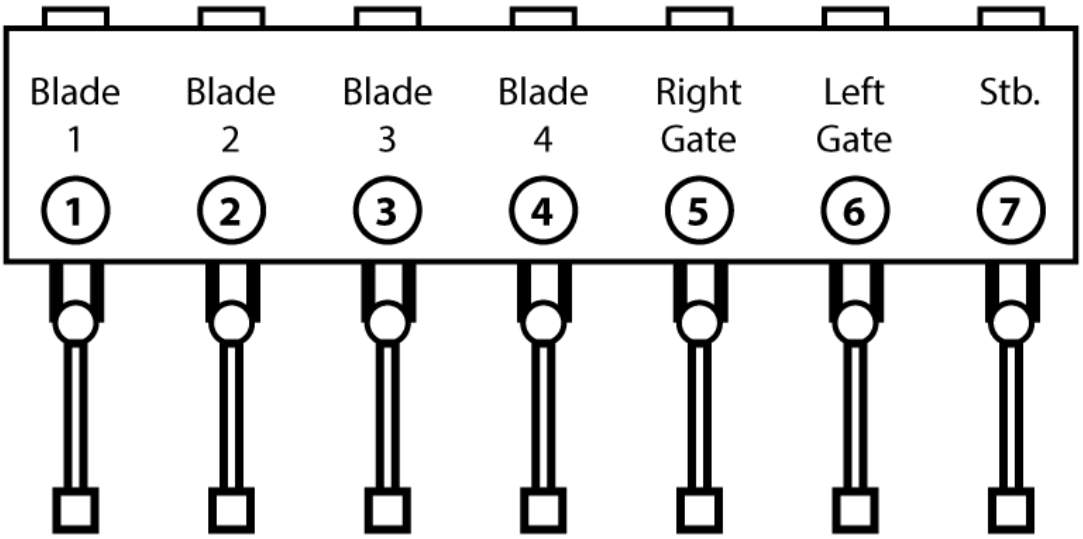

DUTCHMAN BLADE CONFIGURATION

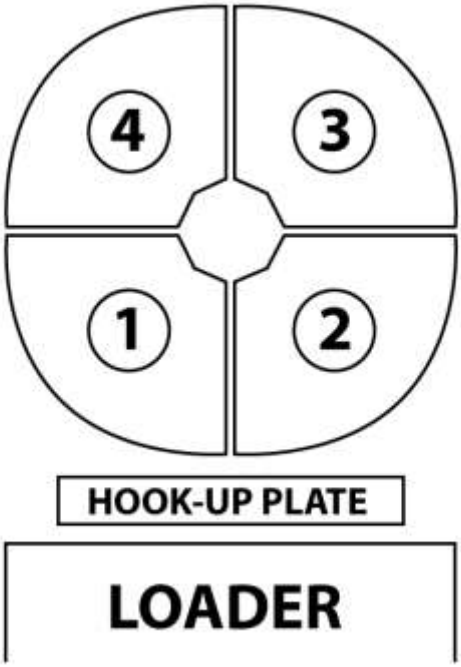

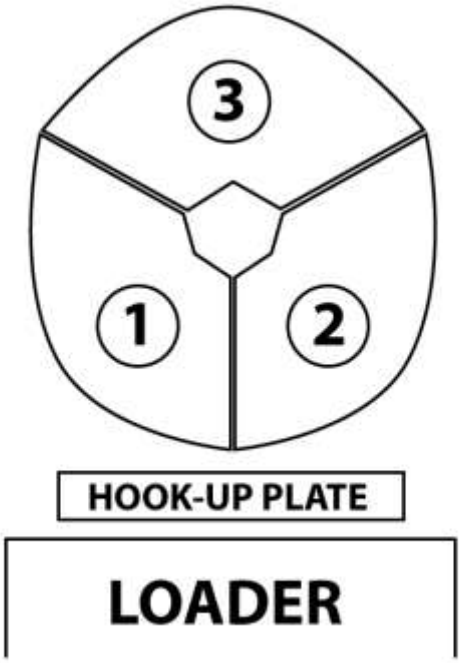

REAR STABILIZERS

Rear stabilizer kits are available from Dutchman Industries for fitting to various skid steer loaders. The rear stabilizer hoses can connect to the tree spade control valve and are therefore controlled by the operating control switch on the controller if equipped.

Rear stabilizers are recommended to get the maximum performance from your tree spade. The rear stabilizers allow as much weight as possible to be transferred to the front of the skid steer and therefore to the tree spade for maximum digging ability.

OPERATION

➔ WARNING: Always follow the instructions in your skid steer loader operators manual for operating the auxiliary hydraulic controls and follow the Safety Shutdown Procedure whenever leaving the operators station of the skid steer.

After the tree spade has been properly attached, raise the unit above the ground approximately 2 feet. Acquaint yourself with the various controls. After becoming familiar with the controls it is advisable to dig in soil without a tree. This will provide an opportunity to check the ball size as well as the tree spade's operation.

The blades on the tree spade are number 1, 2, 3 and 4 (if so equipped).

Using the gate control function will open the forward blade or blades. When using a four blade tree spade, each gate has an individual function with a locking mechanism. In order to unlock the gate on a four blade spade you will need to reverse the right gate function first to unlock. After the gates are unlocked, open the left gate first before opening the right gate.

Conditions and types of soil affect how the tree spade operates. In firm soil the blades may travel only one-third of the way down on the first stroke. In loose or sandy soils, the blades may penetrate completely in one full stroke.

The amount of root ball needed will vary per the diameter of the tree trunk, the height of the tree, or the type of tree. A general rule of thumb is that every inch of tree diameter requires a minimum of ten inches of ball diameter.

The tree spades are equipped with adjustable legs that are used for adjusting the ball size. With the legs fully raised the ball size will be the rated size of your tree spade. Moving the legs down will decrease the ball size approximately 2" for each adjustment hole. However, the adjustable leg pocket includes a secondary hole allowing finer adjustment of the root ball size. If the legs are removed completely the tree spade will dig a slightly larger hole than its rated size. Lift and block the spade before making any leg adjustments.

BALLED AND BURLAPPED TREES

Refer to the pictorial outline for the process below on pages 22 & 23.

1. With the gates open and the blades in the up position, center the tree in the tree spade from left to right and front to back.

NOTE: It is CRITICAL that the tree is centered in the ball. Therefore it is advisable to have someone on the ground to aid in the alignment process.

2. Close the gate. In the case of a four blade tree spade, close and securely lock both gates.

3. Lower the loader arms, raising the front wheels off the ground.

4. Lower the rear stabilizers (if so equipped) until the loader feels level.

➔ ***WARNING: Raising the loader until the wheels are only slightly off the ground transfers the weight to the tree spade for maximum digging power. Lifting the loader too high may cause instability.***

5. Tilt the tree spade until it is level.

6. Once the tree spade is level, the loader is raised slightly and the gate is closed, it is time to start lowering the blades. Using the controller, lower "Blade 1" as far as it will go into the soil. (Due to the different soil conditions the blade may go all the way into the ground or only slightly).

7. As soon as the blade starts to tilt the attachment, stop movement and raise the blade slightly to remove some of the down pressure. This will aid in digging the maximum ball size and prevent digging an angled hole.

8. Lower "Blade 2" as far as it will go into the soil. As soon as the blade starts to tilt the attachment, stop movement and raise the blade slightly to remove some of the down pressure.

9. Repeat step 8 for "Blade 3" and "Blade 4" (if so equipped).

10. If the blades failed to lower completely due to the soil conditions, repeat Steps 6 through 9 until all the blades are completely lowered into the soil.

11. When all blades are fully lowered, raise the rear stabilizers (if so equipped).

12. Raise the loader arms until the wheels are resting completely on the ground.

13. Lift the tree out of the hole.

➔ ***WARNING: For maximum safety, carry the tree as low as possible when transporting.***

14. Placing the burlap on the ground or in the wire basket, position the tree in the center of the burlap.

BALLED AND BURLAPPED TREES

15. Release the ball by first raising the last blade inserted and continuing to raise the blades in reverse order.

16. Lift the tree spade slightly and open the gate(s). Back the loader away from the tree. The ball is ready for final packaging.

17. Finish wrapping the tree.

DIRECT TRANSPLANTING

1. Determine the size of hole needed for the tree you are transplanting. Install the correct blades and adjust the legs to achieve the desired hole size.

2. Raise the blades and drive the skid steer to the location that the tree will be planted and position the skid steer so the loader is as level as possible. Follow Steps 2 through 14 in the previous instructions (Balled and Burlapped Trees) to dig a spot for the tree.

3. Lift the dirt ball out of the ground and move it out of the way. Set the tree spade on the ground and raise the blades to release the dirt ball. The blades should be raised in the reverse of the order they were inserted. Open gate(s).

4. See Steps 1 through 15 in the previous instructions (Balled and Burlapped Trees) to dig up the desired tree for transplanting. Cover bottom of tree spade if necessary to prevent any soil loss.

➔ ***WARNING: For maximum safety, carry the tree as low as possible when transporting.***

5. Position the tree over the previously dug hole, and while keeping the tree trunk as vertical as possible, lower the tree.

6. Release the ball by first raising the last blade inserted and then continue to raise the blades in the reverse of the order they were inserted.

7. Lift the tree spade slightly and open the gates. Back the loader away from the tree.

NOTE: Follow any specific transplanting instructions, such as watering and mulching etc., for the type of tree you are transplanting.

Digging Sequence (Skid Steer)

[1] Connect the tree spade to the loader and ensure that all blades are in the upright position. Then activate the gate door opening so that it is fully open.

[2] With blades up and gate open drive the tree spade forward and around the tree.

[3] Close the gate and ensure that the spade is completely centered around the trunk of the tree.

[4] Place the spade downward onto the ground and apply pressure from the loader arms onto the spade. Apply rear stabilizers (if equipped) to allow for further down-pressure on spade.

[5] Insert blades (one at a time) until spade starts to rise upward. Then retract blade until frame settles back down. Then activate another blade and repeat until you come back to first blade started.

[6] Repeat step 5 until all blades are inserted to their fullest depth.

[7] Retract stabilizers (if equipped) and slowly lift the tree spade out of the hole. The tree roots will be completely enclosed within the pod blades of the tree spade.

[8] After the tree is raised from the hole, the tree is tilted into a horizontal position. The tree is ready to be placed into a pre-dug hole or into a basket for packaging.

Digging Sequence (Wheel Loader)

[1] The trees spade is positioned up-right with the blades raised and the gate open.

[2] With blades up and gate open the entire unit is moved into position.

[3] The tree spade is positioned so that the tree is equidistant from each blade prior to closing the gate.

[4] The gate is closed and locked hydraulically.

[5] The entire unit is lowered to the ground and the blades are inserted into the ground one at a time hydraulically. The operator maintains full control of the entire operation from one centrally located control point.

[6] Insertion of the blades to their fullest depth completes the cycle. At this point, stabilizers are lowered and vertical extraction of the ball and tree is completed.

[7] The spoon shaped blades follow a curvilinear track forming a totally enclosed pod of roots and soil.

[8] After the tree is raised vertically from the ground the tree is tilted into a horizontal position. The stabilizers are raised and the tree is ready for transporting to its new location.

Trouble Shooting for Electric over Hydraulic Spade

If your tree spade has lost one or more of its functions, it may be due to a variety of reasons that can be isolated by reviewing the following trouble shooting tips.

- Check the fuse located by the controller. The fuse is a standard 5-amp that can easily be replaced.

- Turn the key for the loader unit on, in order to energize the spade electronics.
  NOTE: Turn the key to accessory mode if possible.

- Find and open the "Circuit Board" box, which is located directly above the valve bank attached to the tree spade.

- Check to make sure the circuit board "Power" light is on. This will insure that electric current is flowing to the circuit board.

- Activate all available circuits on the control box or pistol grip controller. This should be done one at a time so as to avoid confusion.

- The circuit board contains lights that correspond to the functions on the controller. Therefore, by pressing or moving a switch, the top row of lights and the bottom row of lights should light up.

POSSIBLE ISSUES

1. The "Power Light" stays on but only the bottom row of indicator lights light up *OR* One or more of the bottom lights do not light up.

-This indicates that a ground wire fault. This can be caused by an unsecured controller or a ground wire that has fallen off its contact.

-Retrace the ground wire coming from the control box and make certain that the ground lead is fastened to a proper ground that reads "0-volts". Check to ensure that the positive and negative plugs coming out of the controller are fastened together. Also check that the ground wire from the controller is not severed or spliced into the positive wire.

2. One or more of the top indicator lights do not light up.

- This indicates that there is a wire coming from the controller to the circuit board that has been severed, pinched, or fallen off of contact from the plug.

- With the use of a test-light, test all plug-ends by having another person press or move the functions. One power light will stay on constantly and the others will light up when activated. (See diagram 1-2 to locate plug schematics). If there is a function(s) that does not light up when activated, examine the cord and plug connections from the circuit board to the controller and be sure that the cord has not been pinched or cut. Also check the ends of the plug to be sure that the wires are securely fastened to the plug ends.

- If a wire "break" can be detected, then turn off the power from the loader. Using a small knife, make a small, lengthwise incision in the cable being careful not to cut into another wire. Locate the wire "break" and splice it back together if possible. Using the test light again, test to see if all functions work.

Trouble Shooting for Electric over Hydraulic Spade

-If the functions are working again. Tape the repaired cable using electrical tape.

3. The indicator lights light up but none of the functions operate.

- This would most likely indicate that the "Main Solenoid", which is located on the top of the tree spade valve, is not functioning.

-Check the wire harness connections on the bottom of the circuit board and be certain that they are fastened securely.

- Also check to see that there is adequate oil flow coming from the loader to the tree spade.

- If there is not proper oil flow, it may be attributed to a poor pump sender and/or restricted coupler connections on the loader.

4. The indicator lights light up but one or more function(s) do not operate.

- This would most likely indicate that there is problem at the valve body on the tree spade.

- Check the wire harness connections on the bottom of the circuit board and be certain that they are fastened securely.

- If all wires are fastened securely then check the wires that lead into the coils of the valve.

- Listen to hear if the coils are "clicking". This insures that there is power going to the coils.

- Using a metal end (i.e. pocketknife or screwdriver), check to see that the nut that holds the coil in place has magnetism. The metal end should stick to the nut when the function is activated.

- With a plastic end, lightly tap the nut to see if it releases the function. This would likely indicate that a valve actuator has become stuck and needs a replacement.

5. One or more of the functions are operating backwards *OR* the Tree Spade is operating extremely slowly.

- This likely means that the loader auxiliary fluid is running through the valve backwards. Simply flip the fluid flow in the opposite direction to test if this is the cause.

- If not, it is possible that there is too much pressure applied to the "Tie Rods".
The tie rods are the three long bolts that run vertically between all valve sections. Their purpose is to hold all the valve sections in place.

- Using a "Torque Wrench", re-adjust the tie rods to **8-foot pound pressure.** If a torque wrench is not available, re-adjust the tie rods so that they are a quarter to half past hand tight.

If the above tips do not help the problem, then unplug the wire harnesses on the circuit board itself and remove it from its housing by unscrewing the bolts located on the corners and check to see if there is any discoloration on the back of the board.

If there is discoloration on the back of the circuit board, it is advised that you call for technical support from Dutchman Industries Inc.

Trouble Shooting for a Manual Hydraulic Spade

If your tree spade has lost one or more of its functions, it may be due to a variety of reasons that can be isolated by reviewing the following trouble shooting tips.

1. **Valve leaks hydraulic fluid.**

   - This would likely indicate that the fittings connected to the hoses are not tight or the O-rings on the valve have worn out.

   - Tighten all fittings to the hoses and check the O-rings for wear and possible replacement.

2. **Hydraulic System sluggish or weak.**

   - This could be attributed to improper or dirty hydraulic oil, a worn loader pump, or the relief valve on the tree spade has become stuck.

   -Check the loader pump for wear and/or dirty hydraulic oil. **If the hydraulic oil has become dirty, it is recommended that it be drained and re-filled.**

   - Using a "Pressure Gauge", attach it to the ends of the hoses that tie into the tree spade cylinders. Activate the functions and be sure that the pressure gauge reads from 2200 to 2500psi.

3. **Hydraulic System Inoperative.**

   - This would likely indicate that the oil from the loader is feeding into the tree spade backwards, or there is insufficient hydraulic oil in the reservoir.

   - Check your hydraulic fluid levels in the loader and add if needed.

   - Disconnect the hydraulic hoses that couple to the loader and reverse the connection.

   NOTE: The loader pump will labour if the oil is fed in backwards.

4. **The Remote Assemblies are too stiff or too loose.**

   - Loosen the 1" nut and valve adaptors on the end of the cables where they connect to the valve. Rotate the adapting collar clockwise to tighten the cable tension or counterclockwise to loosen the cable tension.

   - Reattach valve adaptors and 1" nut to a snug fit. Test and re-adjust if needed.

If the above tips do not help the problem it is recommended that you call for technical support from Dutchman Industries Inc.

DUTCHMAN TREE SPADE

SCHEMATICS &
PARTS LISTS

DUTCHMAN INDUSTRIES INC.

MANUAL (CABLE OPERATED) VALVE

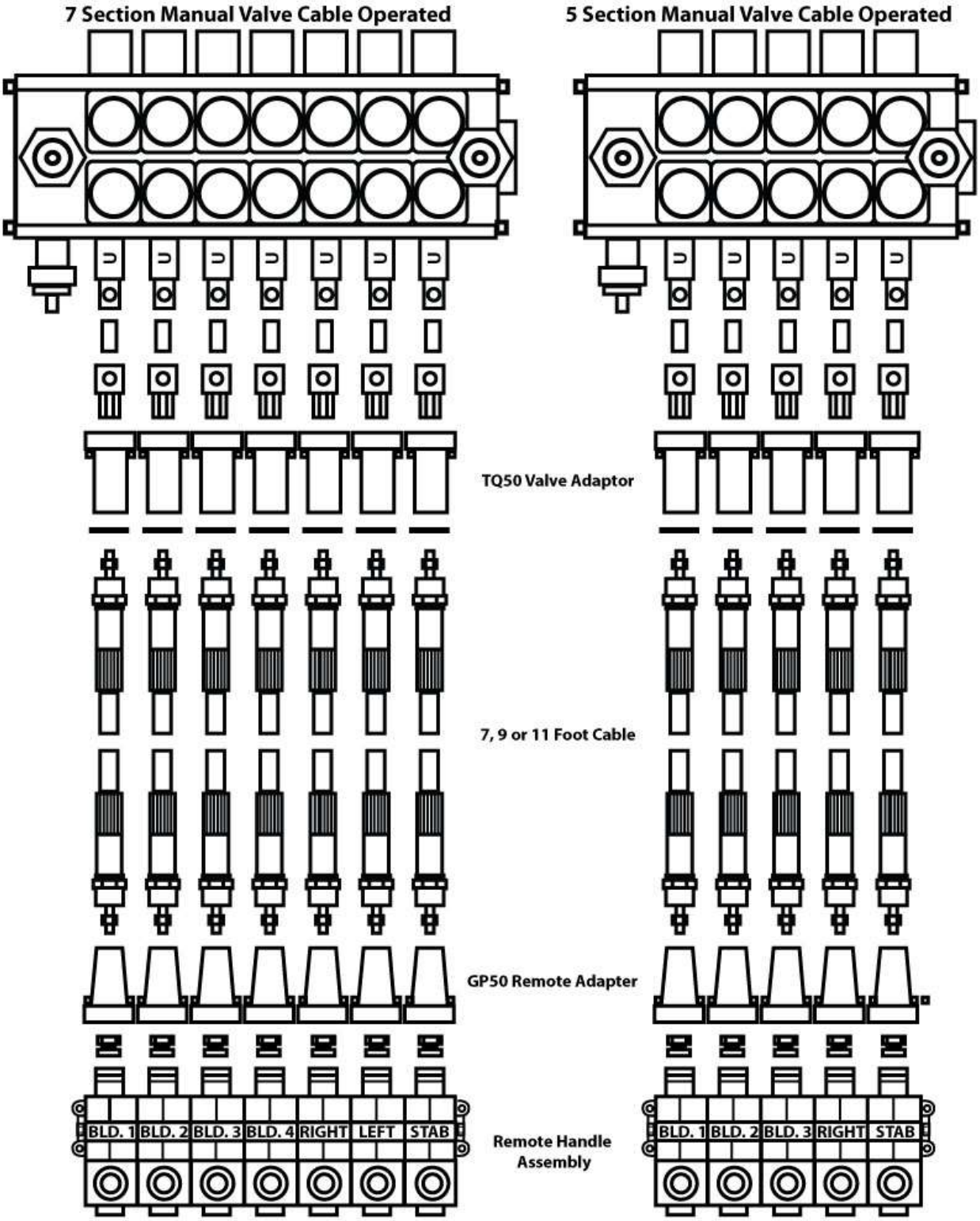

THE ABOVE CONTROL VALVE MAY HAVE MORE CONTROLS.
240i, 300i, 340i, 400i, HAVE THREE (3) SPADE CONTROLS.

450i, 500i HAVE FOUR (4) SPADE CONTROLS.
MANUAL (LEVER OPERATED) VALVE

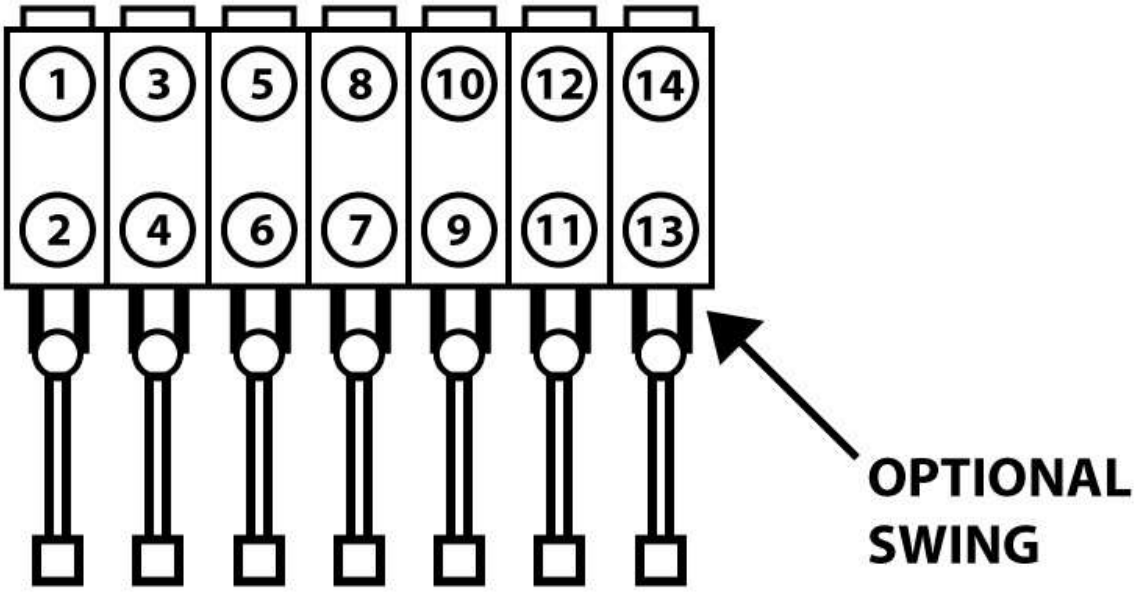
1
3
5
8
10
12
14
2
4
6
7
9
11
13
OPTIONAL
SWING

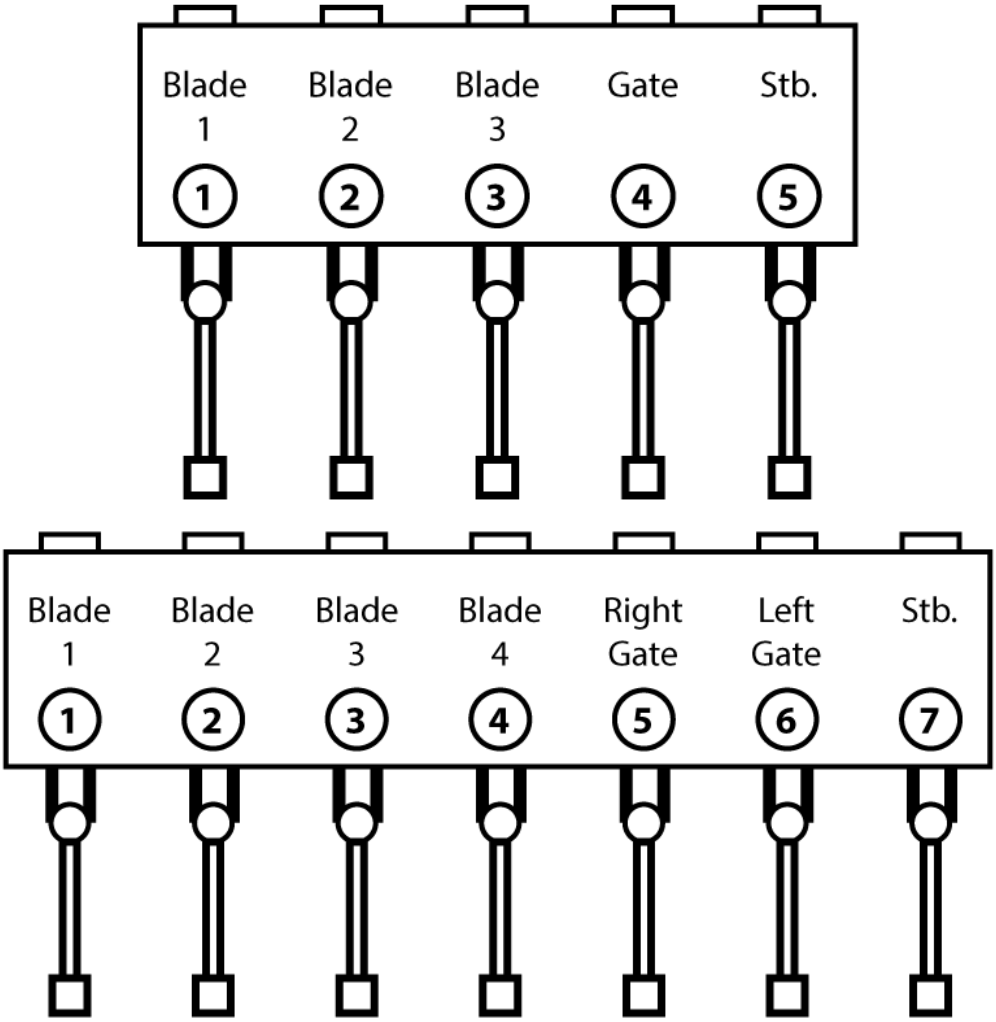
Blade 1
Blade 2
Blade 3
Gate
Stb.
1
2
3
4
5
Blade 1
Blade 2
Blade 3
Blade 4
Right Gate
Left Gate
Stb.
1
2
3
4
5
6
7

ELECTRIC SOLENOID VALVE (BRAND VALVE OPTION)

BRAND SERIES 36-5

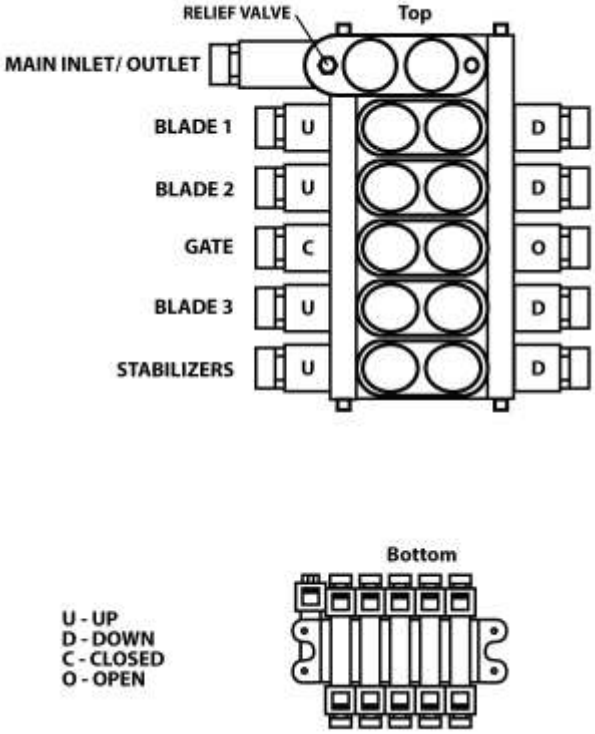

BRAND SERIES 36-7

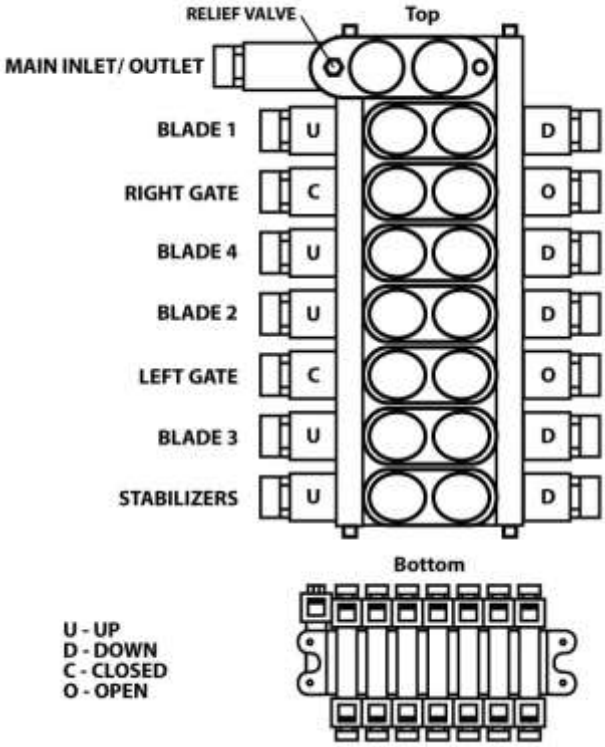

BRAND SERIES 38-5

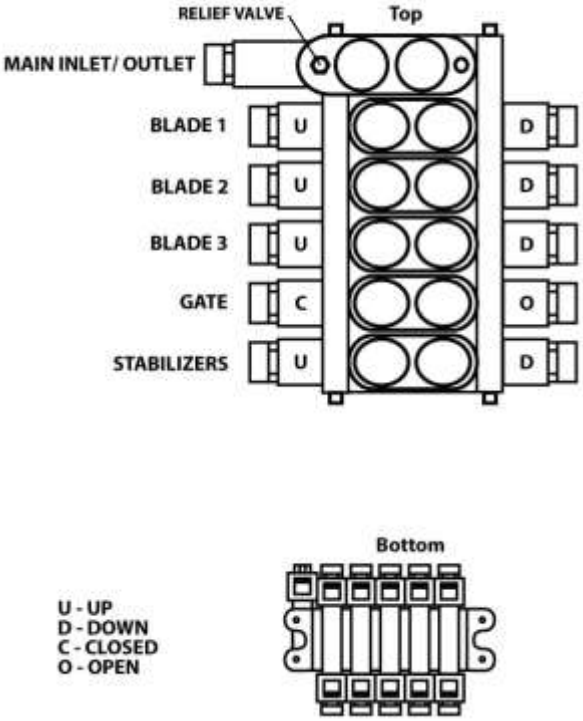

BRAND SERIES 38-7

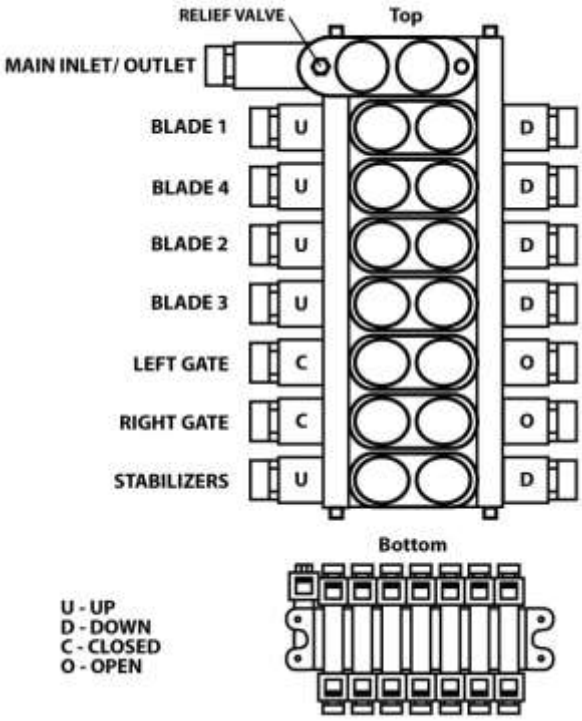

CIRCUIT BOARD SCHEMATIC (BRAND VALVE)

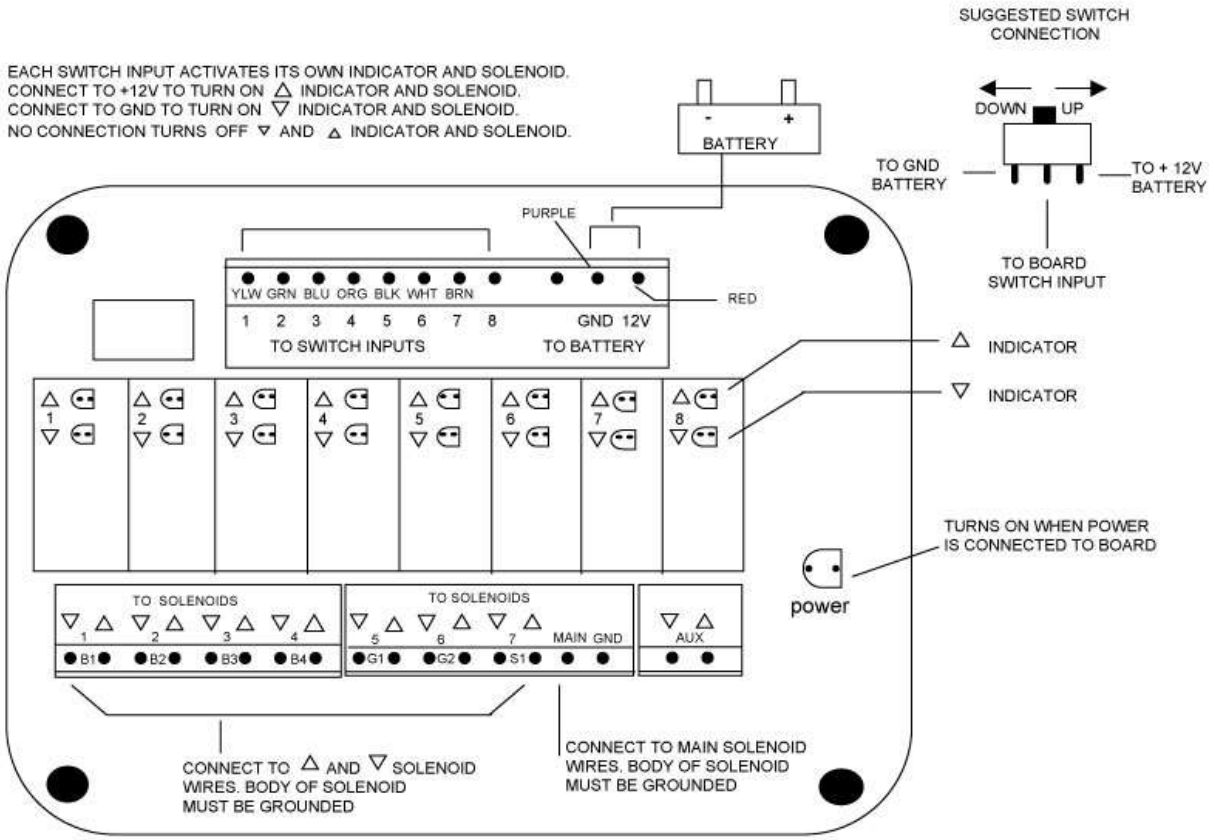

ELECTRIC SOLENOID VALVE (MANIFOLD VALVE OPTION)

5 Section

BILL OF MATERIALS			
ITEM	FPS P/N	DESCRIPTION	QTY
1	2125379.25	RELIEF VALVE (2500psi setting)	2
2	C6351012	12VDC DS COIL	11
3	PC0830NS	PO CHECK VALVE w/ SEALEDPISTON (90 psi bias spring)	1
4	2190113	WORKING SECTION SOLENOID ACTUATORS	5
5	2407050	MAIN SECTION SOLENOID ACTUATORS	4

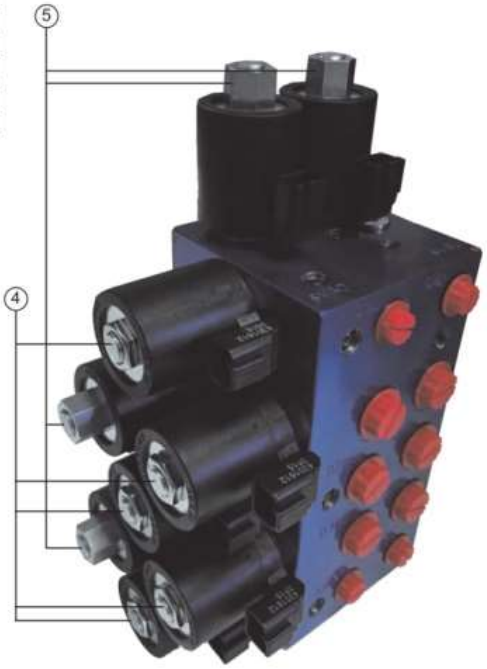

7 Section

BILL OF MATERIALS			
ITEM	FPS P/N	DESCRIPTION	QTY
1	2125379.25	RELIEF VALVE (2500psi setting)	2
2	C6351012	12VDC DS COIL	11
3	PC0830NS	PO CHECK VALVE w/ SEALEDPISTON (90 psi bias spring)	1
4	2190113	WORKING SECTION SOLENOID ACTUATORS	7
5	2407050	MAIN SECTION SOLENOID ACTUATORS	4

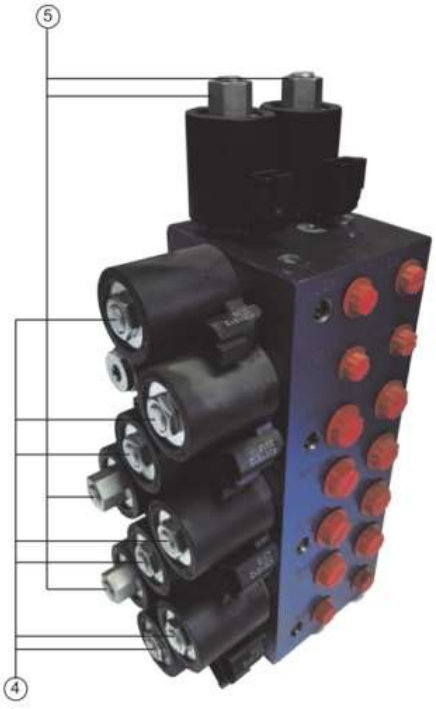

CIRCUIT BOARD SCHEMATIC (MANIFOLD VALVE OPTION)

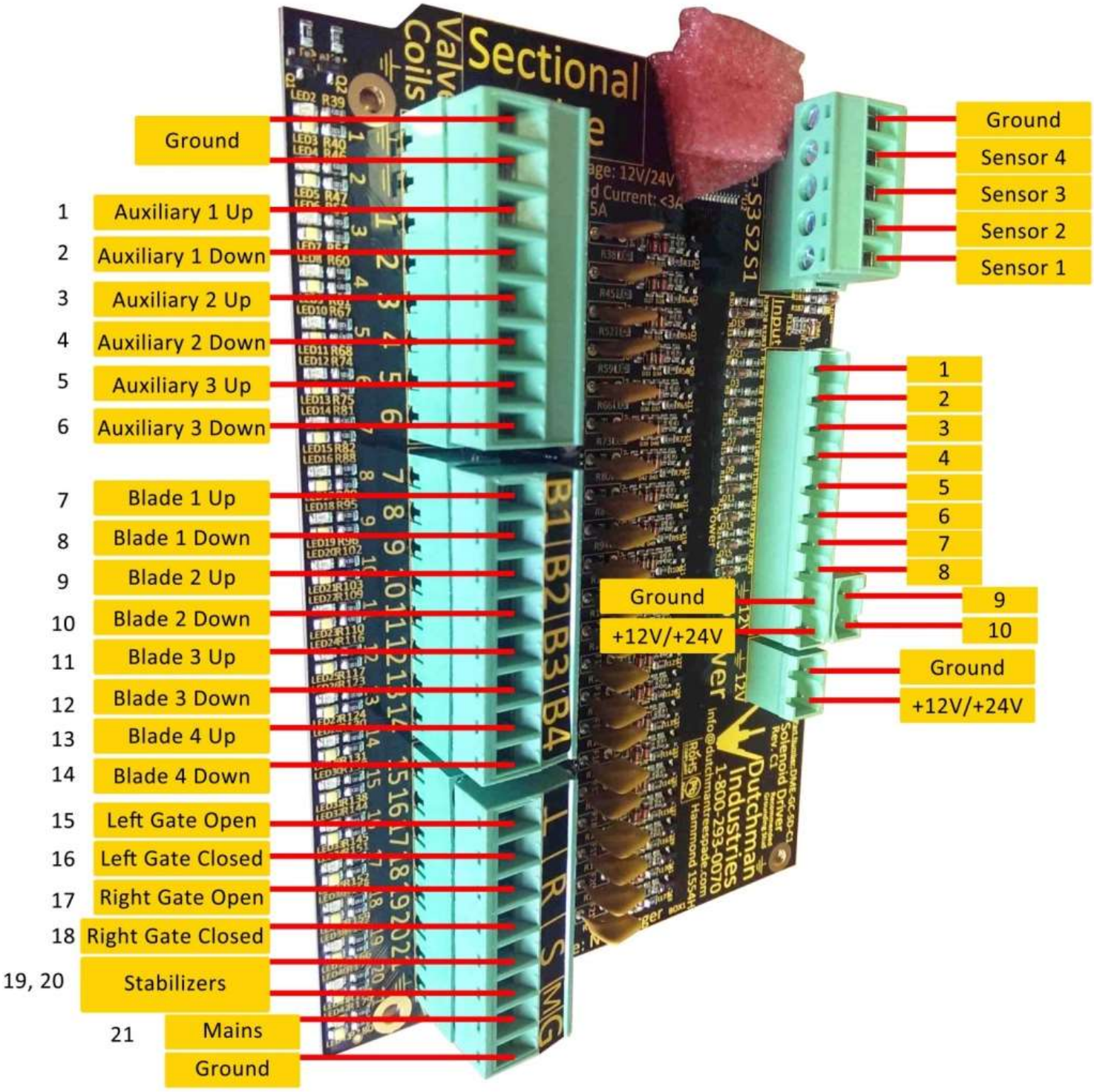

PLUG WIRING DIAGRAM

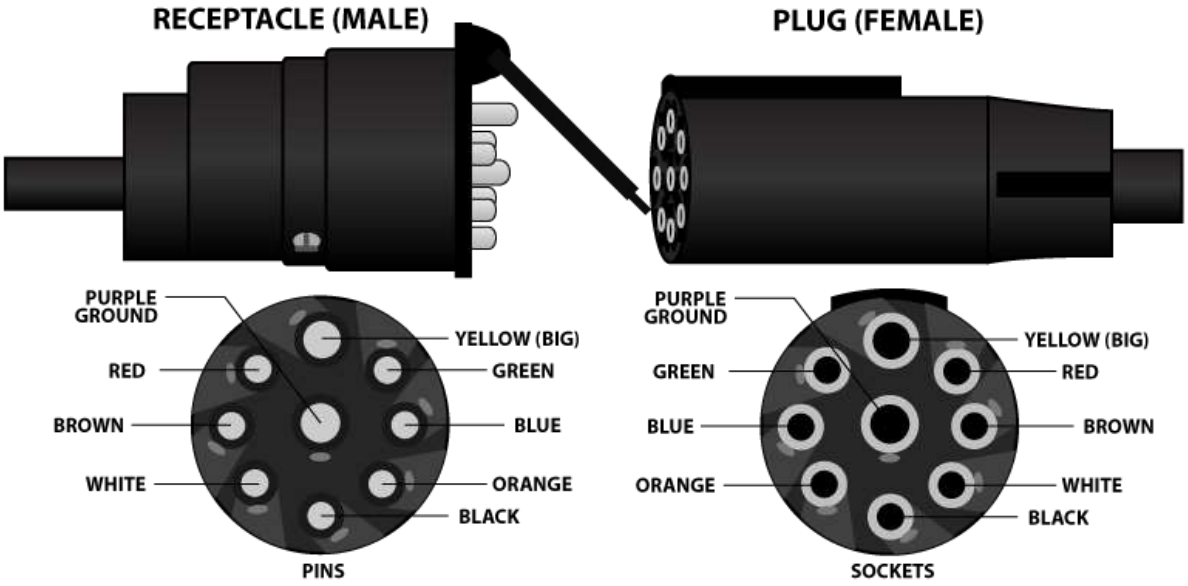

5 BUTTON PENDANT CONTROLLER

TOP BACKSIDE VIEW

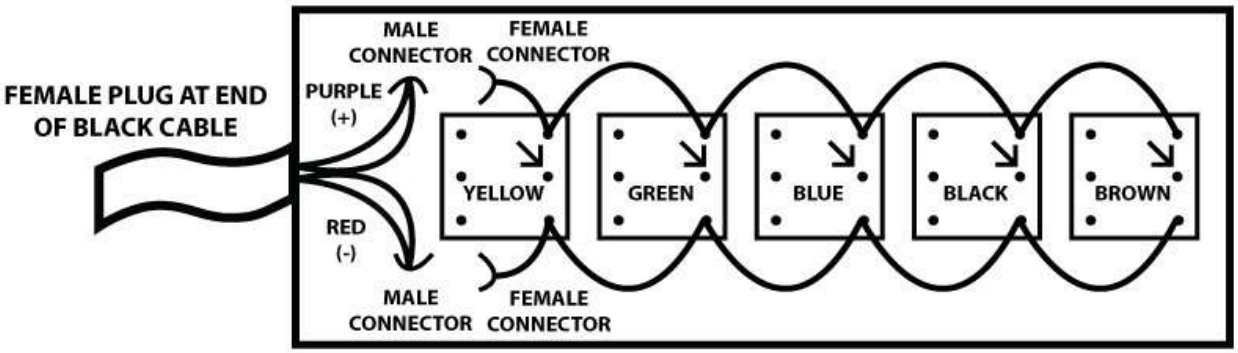

EXTRA WIRES: ORANGE, WHITE, PINK, GRAY, TAN

7 BUTTON PENDANT CONTROLLER

TOP BACKSIDE VIEW

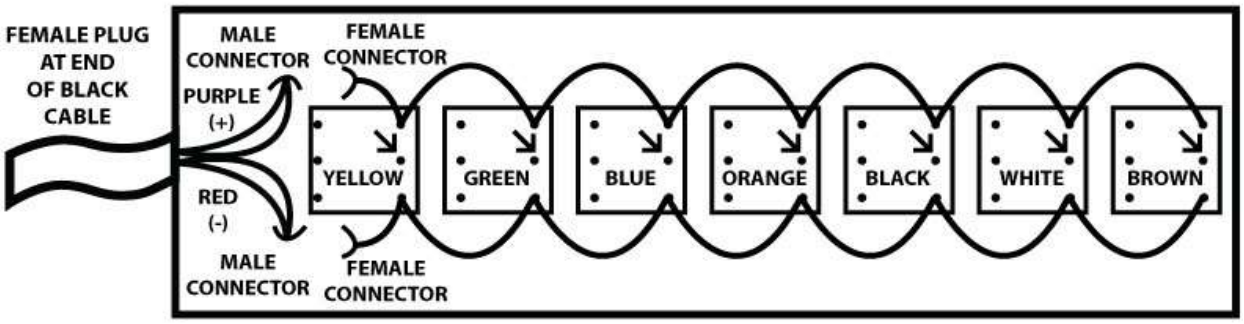

EXTRA WIRES: PINK, GRAY, TAN

5 FUNCTION	7 FUNCTION
BLADE 1 - YELLOW	BLADE 1 - YELLOW
BLADE 2 - GREEN	BLADE 2 - GREEN
BLADE 3 - BLUE	BLADE 3 - BLUE
GATE - BLACK	BLADE 4 - ORANGE
STABILIZERS - BROWN	LEFT GATE - BLACK
	RIGHT GATE - WHITE
	STABILIZERS - BROWN

PISTOL GRIP SCHEMATICS

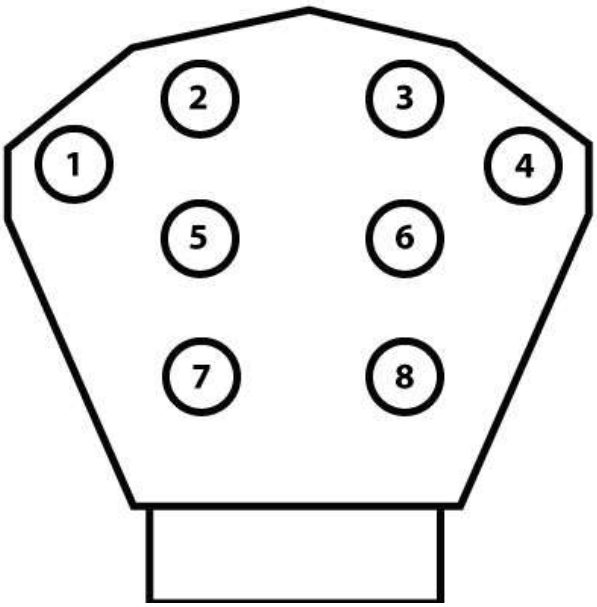

Three Blade Spade		
Button	Function	Wire Colour
1	Blade 1	Yellow
2	Blade 2	Green
3	Blade 3	Blue
4		Orange
5	Gate	Black
6		White
7	Stabilizer	Brown
8	Spare	*Auxiliary*

Four Blade Spade		
Button	Function	Wire Colour
1	Blade 1	Yellow
2	Blade 2	Green
3	Blade 3	Blue
4	Blade 4	Orange
5	Gate 1	Black
6	Gate 2	White
7	Stabilizer	Brown
8	Spare	*Auxiliary*

PISTOL GRIP SCHEMATICS

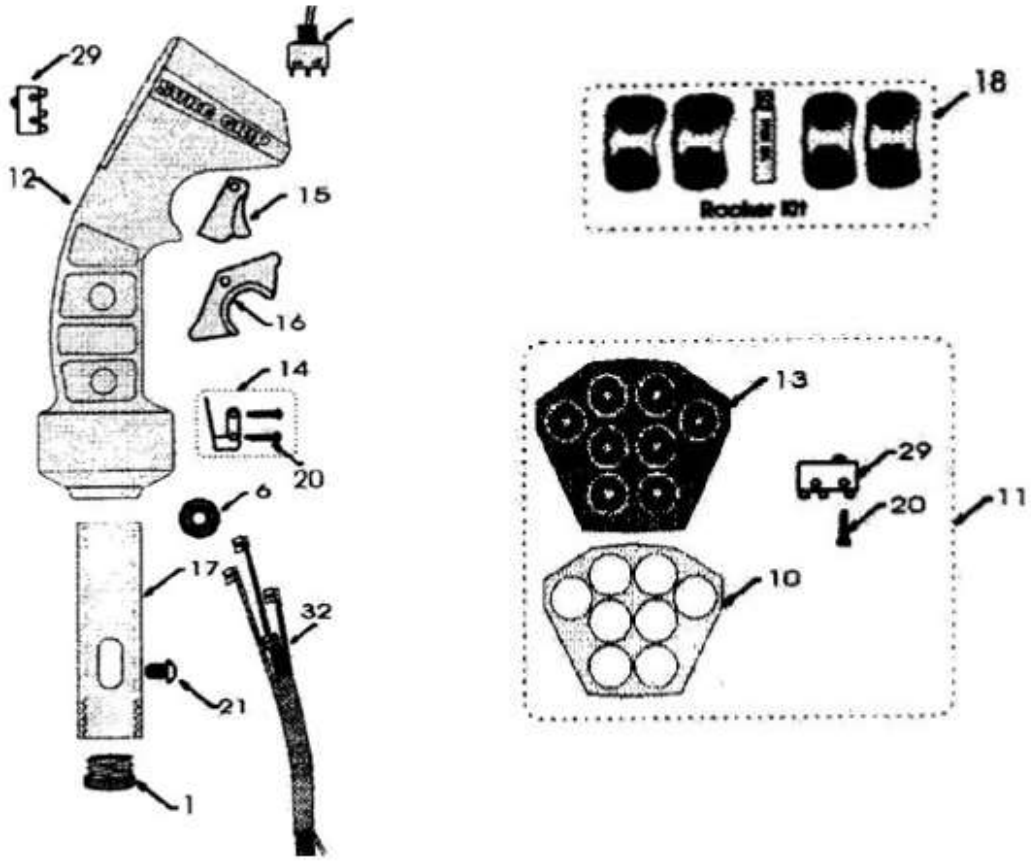

#	Part	Description	#	Part	Description
1	BU-00	5/16 Unthreaded Bushing	14	L6-01	Leef Spring Kit
	BU-01	10 mm X 1.25 Bushing	15	L-TR-01	Single Trigger
	BU-02	12 mm X 1.25 Bushing	16	L-TR-02	Double Trigger
	BU-03	12 mm x 1.75 Bushing	17	PN-03	Mounting Pin
	BU-04	14 mm X 2 Bushing	18	RK-02	Rocker Lid
	BU-05	5/6" NC Bushing	20	SC-03	#2 X7/16" Self Tapping Screw
8	GR-01	Wire Grommet	21	SC-02	10 – 32 X 3/8" Screw
10	L-FP-01	"L" Series Empty Faceplate	29	SW-00	Switch (Faceplate or Trigger)
11	L-FP-A8	8 Function Switch Pack Assy	31	T0-2MA	Toggle (on/off)
12	L-HL-01	Handle Case - left		T0-3M0	Toggle (on)/off/(on)
	L-HL-02	Handle Case – right	32	L1M8-W	Harness (Single Trigger)
13	L-ME-A8	5 Button Overlay		L2M6-W	Harness (Double Trigger)

REPLACEMENT PARTS LIST

ELECTRIC PARTS

Plug

Receptacle

8 Ft Cable with Hydraulic Hose and Plug

Pistol Grip Joystick Controller

Replacement Wire (Sold By the Foot)

PISTOL GRIP JOYSTICK CONTROLLER

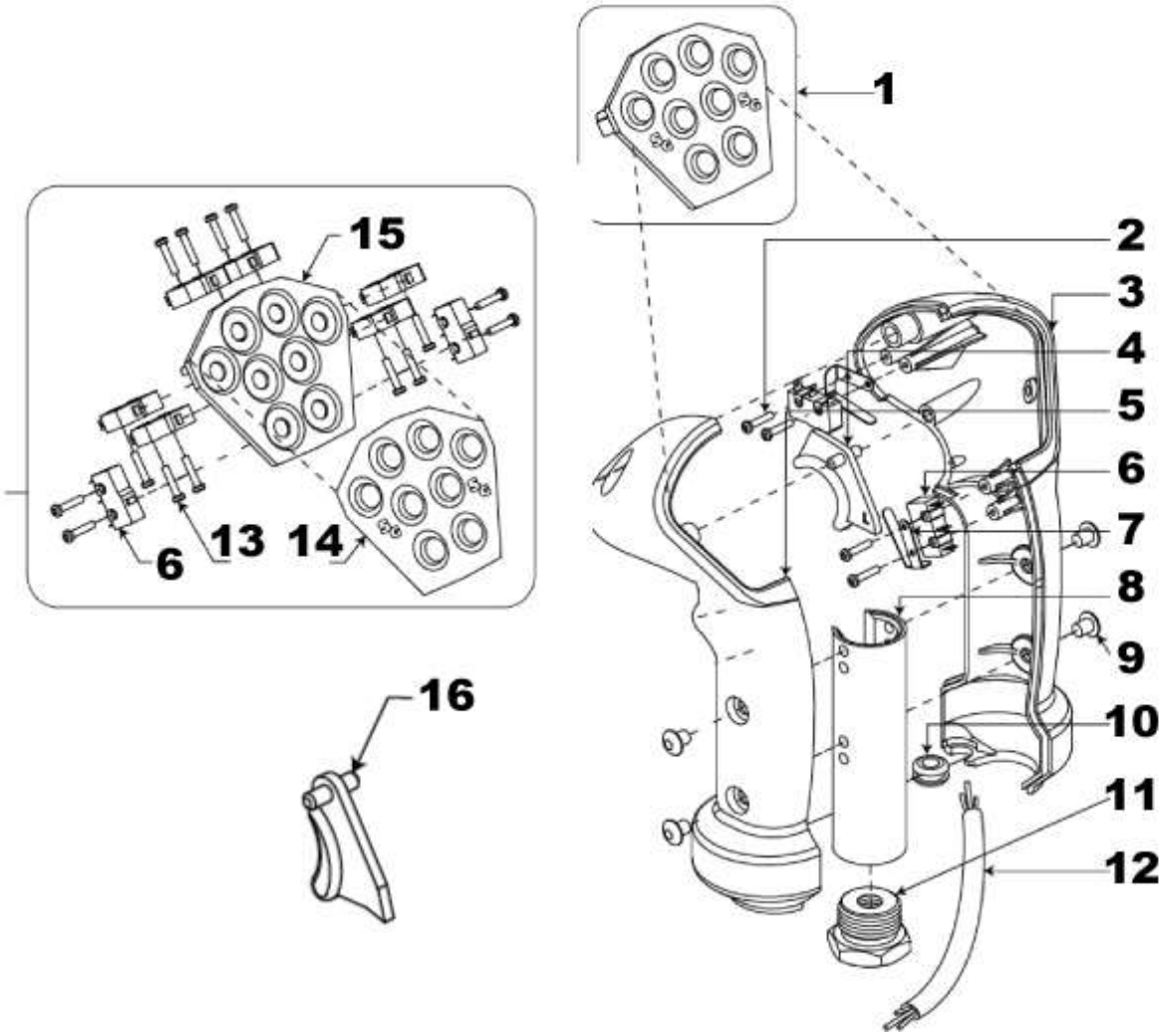

Ref. #	Part #	Description
1	L-FP-A8	"L" 8 Switch Pack Assy.
2	SC-21	2 X 9/16" Tapping Screw – Pan Head (Trigger)
3	L-HL-R-G	"L" Handle Case Right – Grey (Black) (L-HL-02 Handle Case Right – Old Style)
4	L-TR-02	"L" Double Trigger
5	L-HL-L-G L-HLR-Kit-B	"L" Handle Case Left –Grey (Black) (L-HL-01 Handle Case Left – Old Style) "L" Handle Case Upgrade Kit Assy. – Black (Grey)
6	SW-00	Handle Switch, L/S
7	LS-00	Leaf Spring for Trigger
8	PN-03	Mounting Pin "L/S"
9	SC-02SS	10-32 X 3/8" Capscrew – Button Head
10	GR-01	3/8" X 1/4" Grommet
11	BU-00	Adapter Bushing – 1/4" Hole
12	L2-M8-W	"L" Handle 8 Button Faceplate Wire Harness
13	SC-03	2 X 7 1/16" Tapping Screw – Pan Head (Faceplate)
14	L-ME-A8	"L" 8 Button Overlay
15	L-FP-01	"L" Series Empty Faceplate

BRAND VALVE PARTS

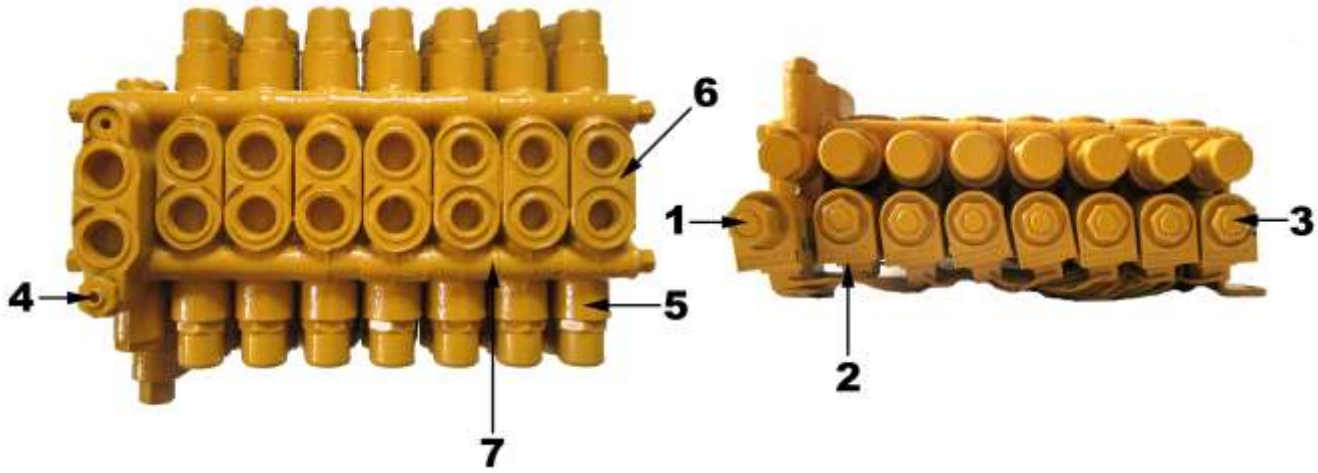

1) Main Actuator with Nut

2) Solenoid Coil

3) Working Actuator with Nut

4) Relief Poppet with Spring (Internal)

5) Section Spool Compression Spring

6) Working Section Spool (Internal)

7) Valve Section Seal Kit (Internal)

8) Brand Valve Circuit Board (Green Board)

MANIFOLD VALVE PARTS

1) Actuator Stem (Working Section) SV10-28

2) Solenoid Coil

3) Actuator Stem (Main Section) SV10-29

4) Relief Cartridge

5) Manifold Valve Circuit Board (Black Board)

CYLINDER PARTS

1a) Blade Cylinder (Bushing-mount Style)

1b) Blade Cylinder Seal Kit

2a) Blade Cylinder (Flange-mount Style)

2b) Blade Cylinder Seal Kit

3a) Gate Cylinder

3b) Gate Cylinder Seal Kit

MAIN SPADE FRAME PARTS

1) UHMW Wear Pads for Slider

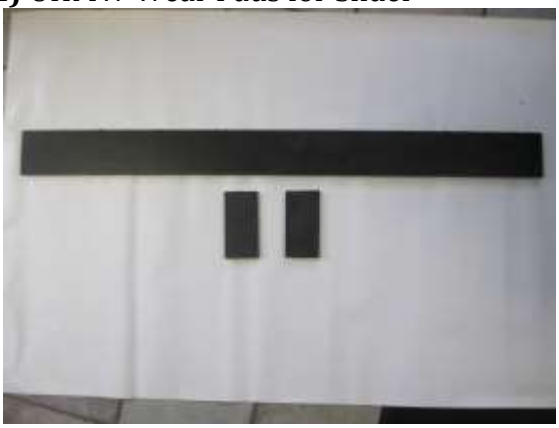

2) Top Tower Cylinder Pins with Set Bolt

3) Bottom Tower Cylinder Pins with Cotter Pin

4) Top Tower Cylinder Pins with Set Bolt

5) Tree Spade Sticker/Decal Kit

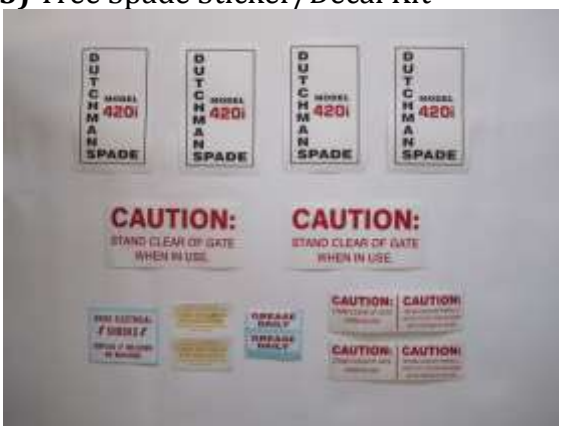

ILLUSTRATION

A) TOP VIEW OF TOWER
- Outside Frame

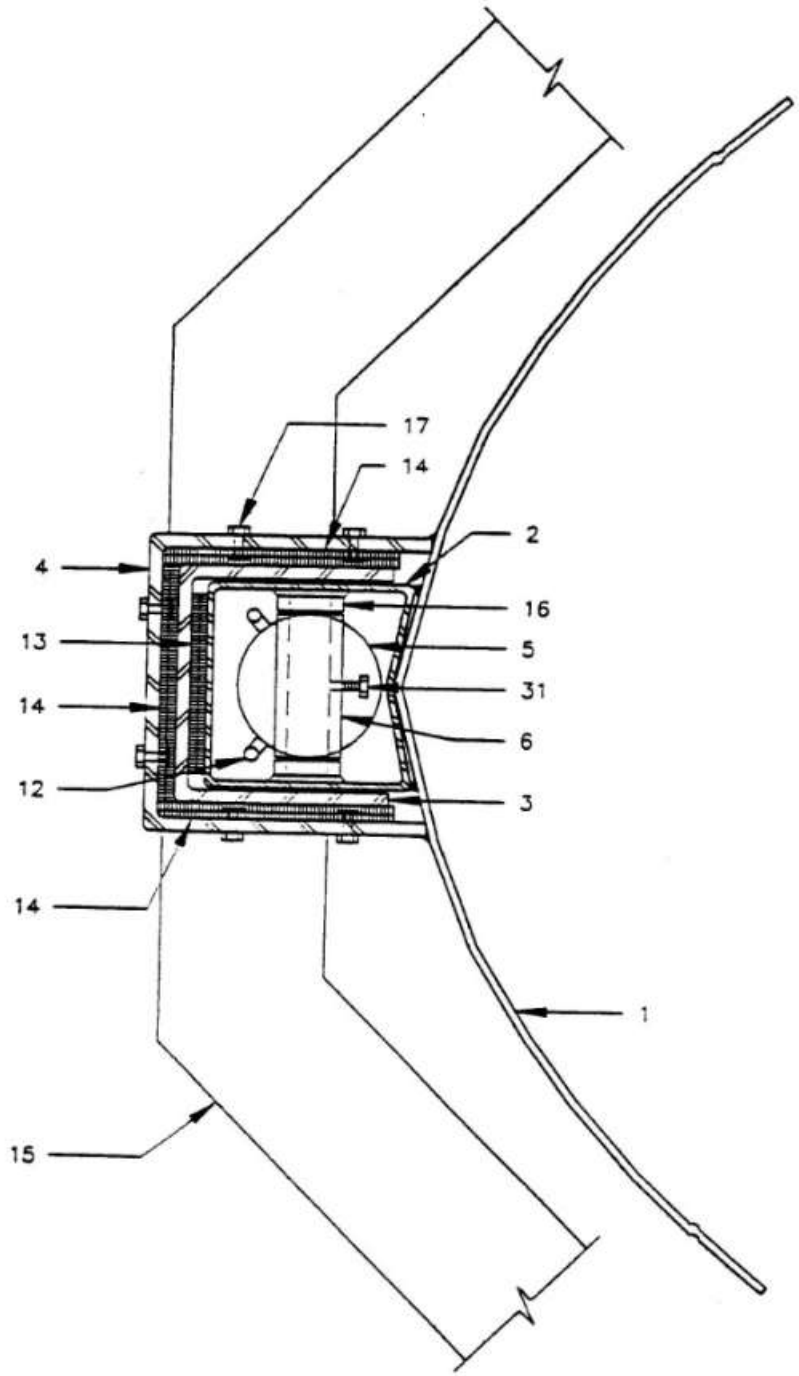

ILLUSTRATION

B) TOP VIEW OF TOWER
-Inside Frame

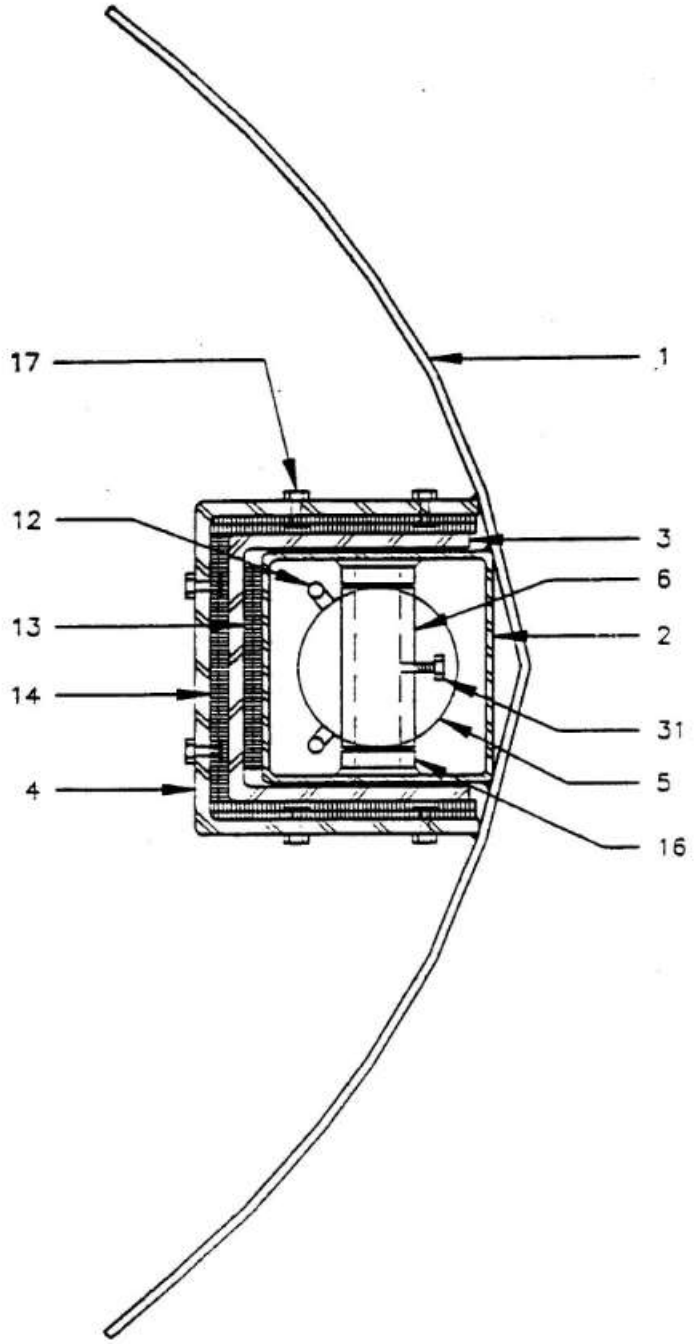

ILLUSTRATION

C) INSIDE ELEVATION OF TOWER AND SPADE

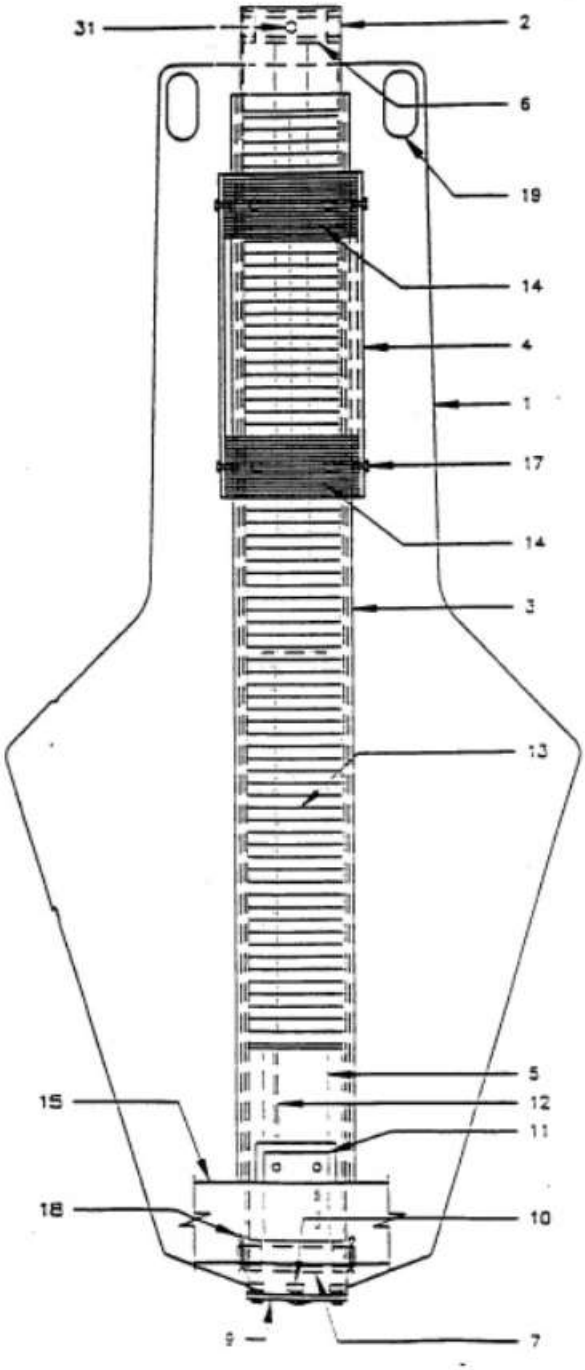

ILLUSTRATION

D) TOP VIEW OF 3-SPADE DIGGER – with Inside Frame

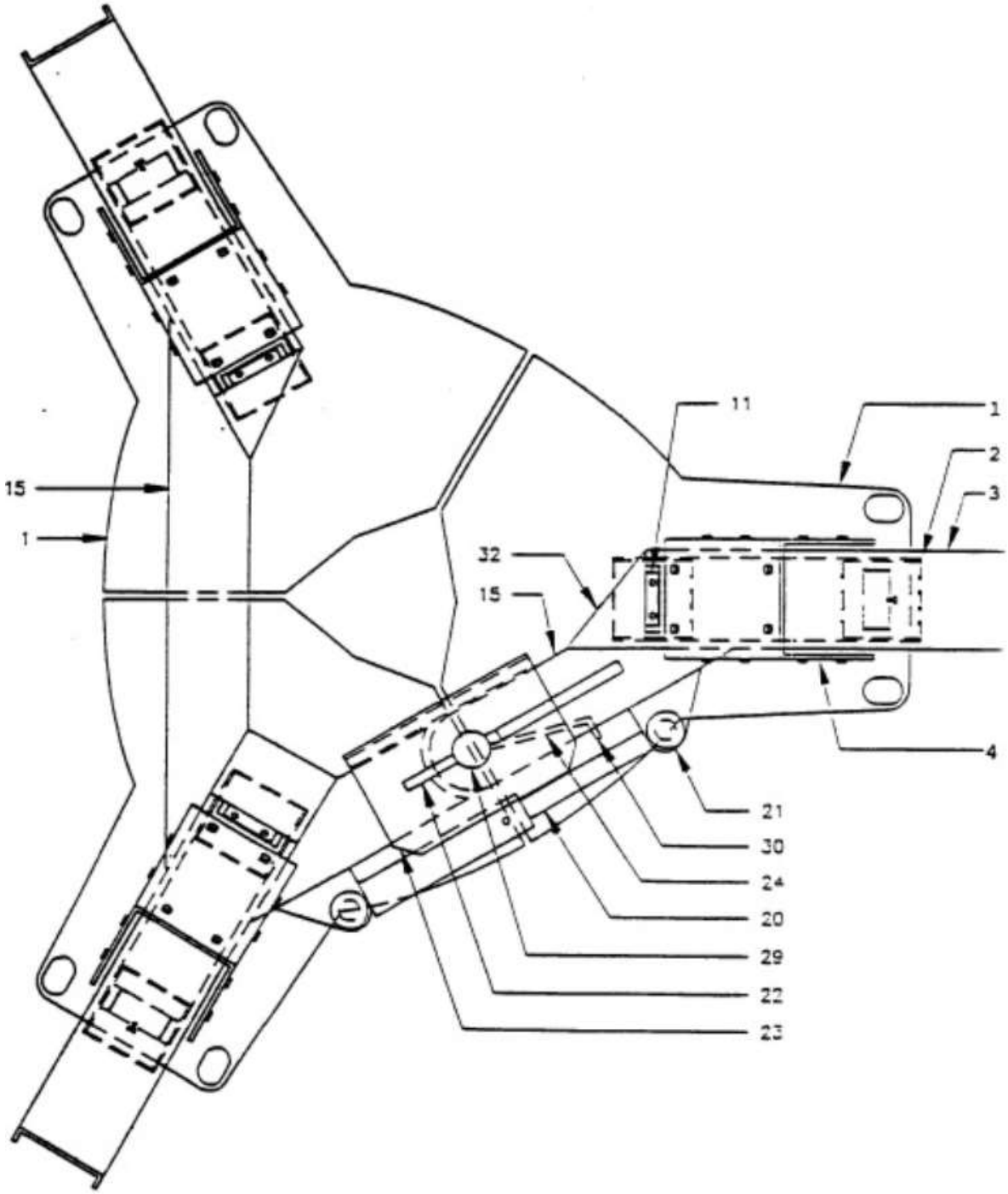

ILLUSTRATION

E) TOP VIEW OF 3-SPADE DIGGER – with Outside Frame

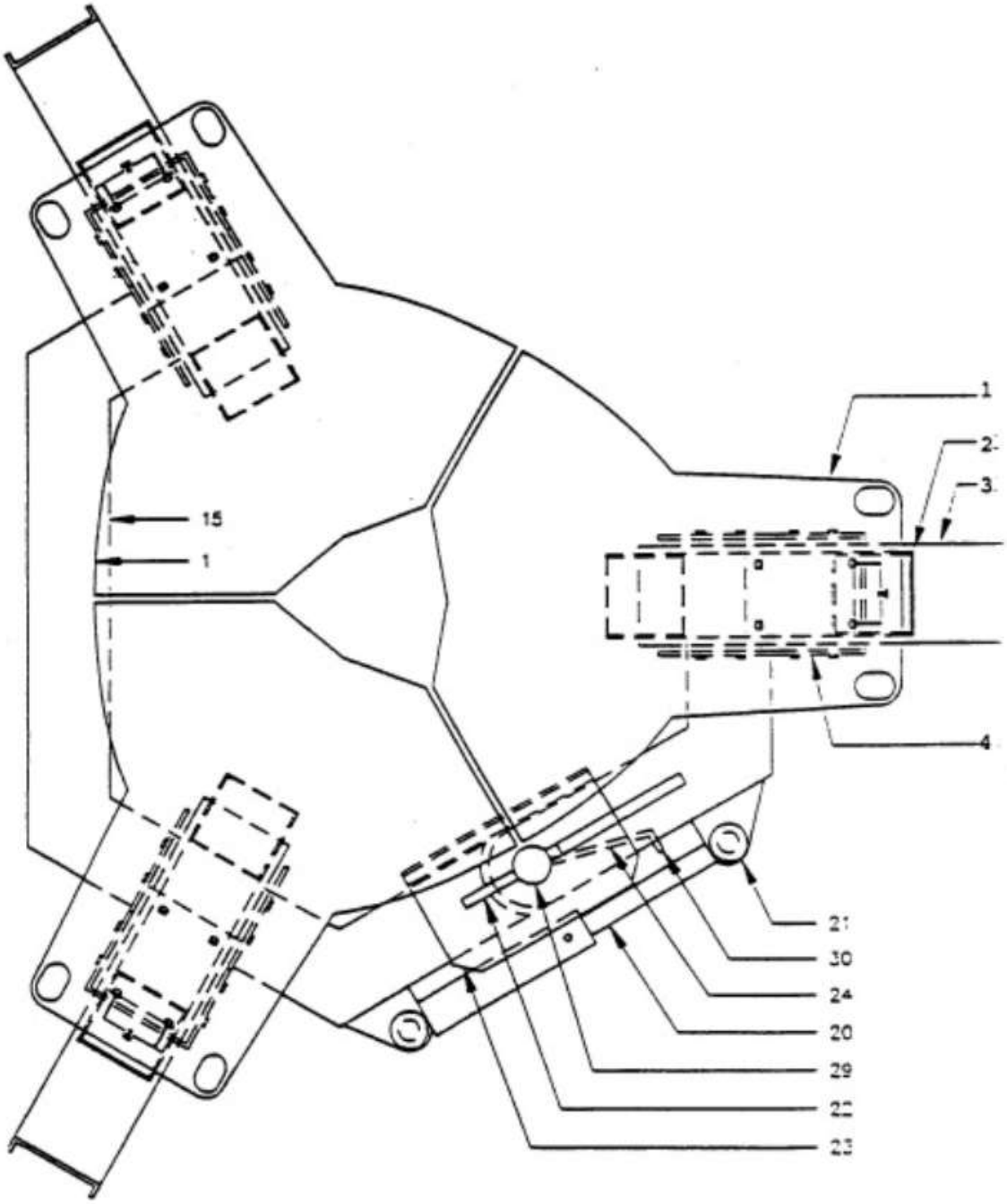

ILLUSTRATION

F) TOP VIEW OF 4-SPADE DIGGER – with Inside Frame

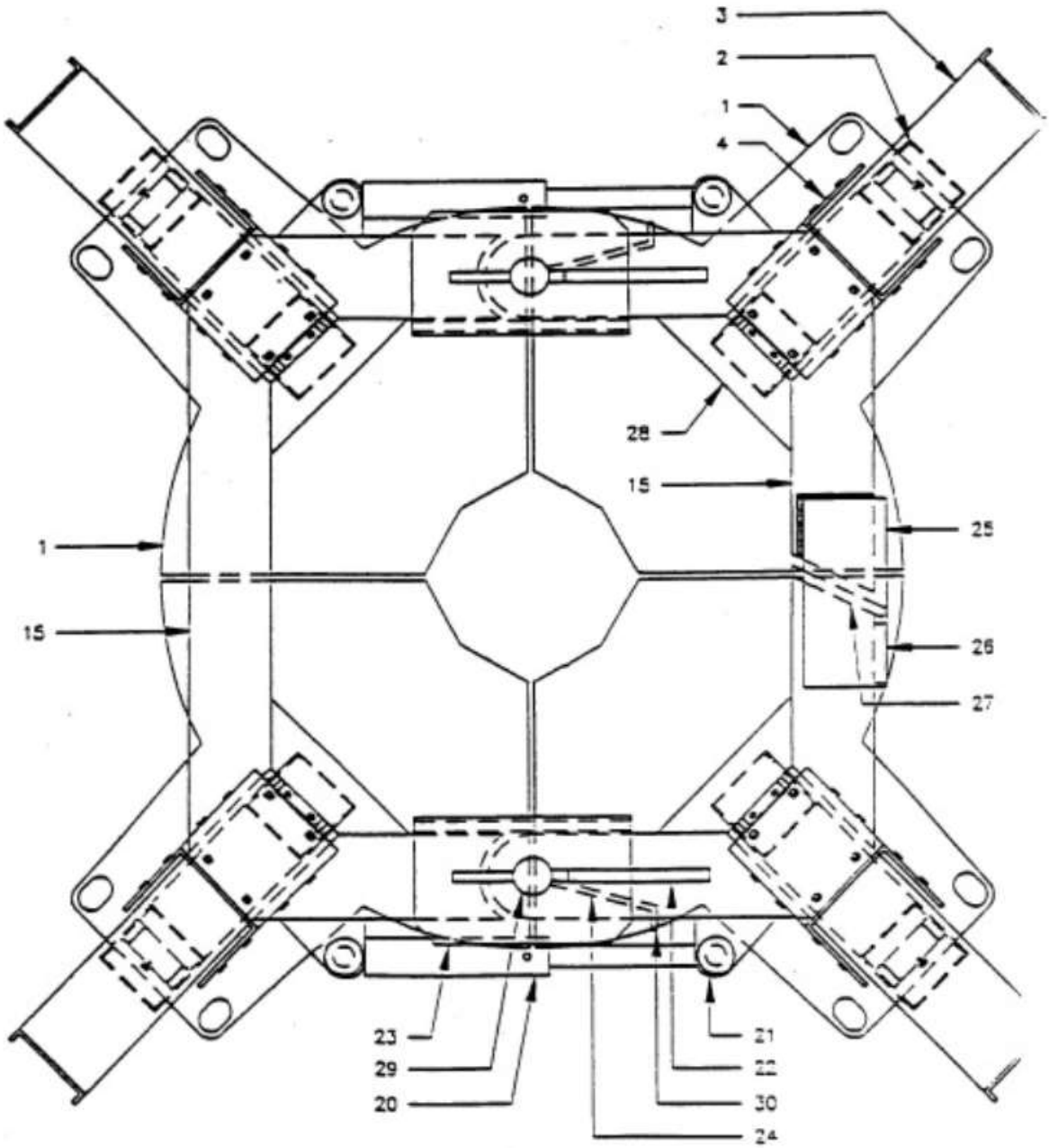

ILUSTRATION

G) SIDE ELEVATION OF TOWER AND SPADE

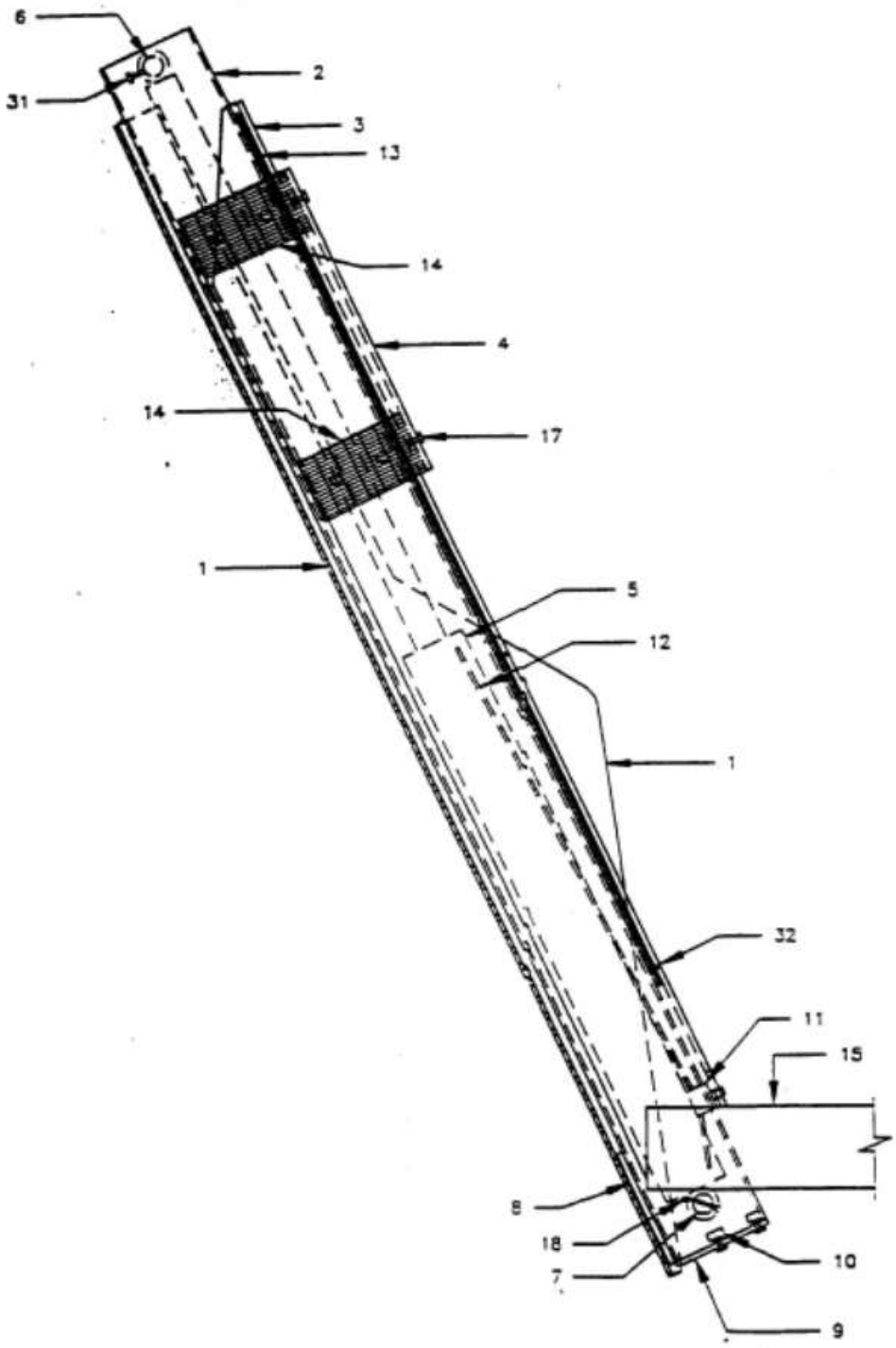

DUTCHMAN STABILIZERS

MOUNTING INSTRUCTIONS

DUTCHMAN INDUSTRIES INC.

STABILIZER MOUNTING INSTRUCTIONS

Prior to mounting your Dutchman Stabilizer Kit, please ensure that all components are present for your skid steer. Your kit should include the following parts:

Option 1: All Bobcat/Case 1816-1845C/Case 430-465/Gehl 3310-6640/Mustang 910-2600/John Deere 375-8875/All Thomas/All JCB/ScatTrak 1300C-2150/All Takeuchi except TL130-TL8/All Caterpillar except A&B-Series Track Units/Kubota SVL75-95

- **2 Stabilizer Towers complete with JIC fittings and feet**
- **4 Flange Plates complete with the following:**
- **8, ¾" x 1 ½" Bolts**
- **8, ¾" Lock Washers**
- **2 sets of 3/8" hosing (1 short set – 90's on both ends. 1 long set – 90's on one end, straights on other)**
- **4 Retaining Rings with set screw for counterweight**

Option 2: John Deere 317-332/CTL322-CTL332/D, E & G-Series

- **1 left and right mounting plates complete with four bolt holes.**
- **2 stabilizer legs with weight brackets attached**
- **6 or 8 metric bolts**
- **4 sets of 3/8" hosing (1 short set – 90's on both ends. 1 medium set – 90's on both ends. 1 long set – 90's on one end, straights on other)**
- **2 tee's**

Option 3: Case/New Holland Alpha Series

- **2 Stabilizer Towers complete with feet, hosing, and Union bar.**
- **2 sets of 3/8" hosing (1 short set – 90's on both ends. 1 long set – 90's on one end, straights on other)**
- **4 Retaining Rings with set screw for counterweight.**
- **2 Spacers**

Option 4: Gehl 7610-7810/V400/Mustang 2095-2195/4000V

- **2 Stabilizer Towers complete with feet, hosing, and under-carriage pocket.**
- **2 sets of 3/8" hosing (1 short set – 90's on both ends. 1 long set – 90's on one end, straights on other)**
- **4 Retaining Rings with set screw for counterweight**

Option 5: New Holland L,LX, & LS 170-190 Series Skid Steers

- **2 Stabilizer Towers complete with JIC fittings and feet**
- **2 Flange Plates complete with the following:**
- **8, ¾" x 2 ½" Bolts**
- **8, ¾" Lock Washers**
- **8, ¾" Nuts**
- **2 sets of 3/8" hosing (1 short set – 90's on both ends. 1 long set – 90's on one end, straights on other)**
- **4 Retaining Rings with set screw for counterweight**

Option 6: Caterpillar A & B Track Series

- **2 Stabilizer Towers complete with feet, hosing, and Union bar.**
- **2 sets of 3/8" hosing (1 short set – 90's on both ends. 1 long set – 90's on one end, straights on other)**
- **4 Retaining Rings with set screw for counterweight**

STEPS FOR ASSEMBLY

Option 1 - All Bobcat/Case 1816-1845C/Case 430-465/Gehl 3310-6640/Mustang 910-2600/John Deere 375-8875/All Thomas/All JCB/ScatTrak 1300C-2150/All Takeuchi except TL130-TL8/All Caterpillar except A & B-Series Track Units/Kubota SVL75-95

Important Information

Your **Dutchman** Stabilizer Kit is designed to assist in providing maximum down pressure to the front loader arms of your skid steer while digging. Steps to assembly may require welding**.** If welding is required for your model of skid steer, please ensure that it is completed in a dry, safe environment. Also avoid assembly while the machine is running.

Step 1

Your towers should already be bolted to the flange plates provided. Line up the towers near the rear of the skid steer using a floor jack. ***Note: the flange plate should be raised up until the footplate is almost touching the bottom edge of the skid steer body.** Once proper alignment has taken place, proceed to step 2.

Step 2

With a standard welder, **(We suggest you use a certified welder)** gently tack-weld the edges of the flange tubes to the frame of the skid steer (or mark accordingly). Counterweight pins on the towers should be facing towards the rear.

Step 3

With the hosing provided, locate the two lengths of 3/8" hosing with 90˚ female JIC fittings. Using the shorter set of lines, attach to the fittings from one tower to the other. **Do not over tighten the fitting nut.** Attach lines to fittings on the towers: left to left and right to right.

Step 4

Attach the longer set of feed lines at the top of the left-hand tower and feed the hosing down the top of the loader arm. If you have a "Scissor Lift" design, run the hosing under and then over the loader arm. **Be careful not to pinch or scar the hosing.** Finally, attach ends of feed lines to the bulkhead bracket provided for the hydraulic couplers

***Special Note**

After your **Dutchman** stabilizer kit has been installed, proper service checks should be made to ensure that the kit functions properly and that all bolts, nuts, fittings, and clamps are secured tightly. We here at **Dutchman** believe the above instructions to be the safest and most effective means of hook-up**.**

Any deviations or special preferences with regards to mounting can be made but only at the owner's risk.

Option 2 - John Deere 317-332/CTL322-CTL332/D, E & G-Series

Important Information

Your **Dutchman** Stabilizer Kit is designed to assist in providing maximum down pressure to the front loader arms of your skid steer while digging. Steps to assembly will require welding for Option 1 only. If welding is required for your model of skid steer, please ensure that it is in a dry, safe environment. Also avoid assembly while the machine is running.

Step 1

Using the two mounting plates provided, raise the side mounting plates to the side body of the skid steer and attach using the 6 or 8 metric bolts provided. Attach the hydraulic legs if not attached already and ensure that the legs do not hit the loader arm or the bottom leg pad does not catch the bottom of the loader. **Note: the CTL loaders do not have a bolt pattern and therefore the mounting plates must be welded.**

Step 2

Once the flange plates and stabilizer legs are properly attached, remove the hosing from the box provided. Open the hood of the skid steer and remove the side panels.

Step 3

Looking from the rear of the skid steer, connect the medium length of hosing to the right stabilizer leg and place the lines into the right panel of the engine compartment. Run hoses up over the engine. Connect the lines to the tees provided and tuck just inside left hand engine compartment. Connect the shorter length of hosing to the left stabilizer leg and place the lines into the left panel and connect to the tees provided. **Note: Ensure that the lines are not criss-crossed.**

Step 4

Connect the longer set of feed lines to the tees and run out the left hand engine panel. Route them down the loader arm to the front of the skid steer. The John Deere has a Scissor Lift design, the hosing must run under and then over the loader arm and down to the front. **Be careful not to pinch or scar the hosing.**

Step 5

Once the hosing is securely attached. Replace that side panels and lock down the hood. **The front corners of the side panels will need to be cut to allow room for the hosing.** Tie down straps are recommended to hold the hydraulic lines together to prevent potential scaring.

***Special Note**

After your **Dutchman** stabilizer kit has been installed, proper service checks should be made to ensure that the kit functions properly and that all bolts, nuts, fittings, and clamps are secured tightly. We here at **Dutchman** believe the above instructions to be the safest and most effective means of hook-up**.**

Any deviations or special preferences with regards to mounting can be made but only at the owner's risk.

Option 3 - Case/New Holland Alpha Series

Important Information

Your **Dutchman** Stabilizer Kit is designed to assist in providing maximum down pressure to the front loader arms of your skid steer while digging. Steps to assembly will require welding for Option 1 only. If welding is required for your model of skid steer, please ensure that it is completed in a dry, safe environment. Also avoid assembly while the machine is running.

Step 1

Remove rear skid steer bumper using a socket and a floor jack. Remove the harness bolts and remove the rear bumper out from the rear of the skid steer.

Step 2

Using a lift apparatus, raise and tilt the stabilizer forward to allow the union bar to fall into the existing bumper bracket.

Step 3

Using the floor jack, replace the rear bumper and insert the existing bumper bolts and nuts to hold the stabilizer into place. Once the bolts are tight and secure, raise the stabilizer legs and ensure that all bolts fittings and clamps are tight and secure. **The larger body machines may require the two spacers to ensure the stabilizers are securely attached.**

Step 4

With the hosing provided, locate the two lengths of 3/8" hosing with 90˚ female JIC fittings. Using the shorter set of lines, attach to the fittings from one tower to the other. **Do not over tighten the fitting nut.** Attach lines to fittings on the towers: left to left and right to right. **Note: If feed lines are fed through the loader arm, than pre-drilled holes must be made on the front loader arm plate.**

Step 5

Attach the longer set of feed lines at the top of the left-hand tower and feed the hosing down the top of the loader arm. If you have a "Scissor Lift" design, run the hosing under and then over the loader arm. **Be careful not to pinch or scar the hosing.** Finally, attach ends of feed lines to the bulkhead bracket provided for the hydraulic couplers

***Special Note**

After your **Dutchman** stabilizer kit has been installed, proper service checks should be made to ensure that the kit functions properly and that all bolts, nuts, fittings, and clamps are secured tightly. We here at **Dutchman** believe the above instructions to be the safest and most effective means of hook-up**.**

Any deviations or special preferences with regards to mounting can be made but only at the owner's risk.

Option 4 - Gehl 7610-7810/V400/Mustang 2095-2195/4000V

Important Information

Your **Dutchman** Stabilizer Kit is designed to assist in providing maximum down pressure to the front loader arms of your skid steer while digging. Steps to assembly will require welding for Option 1 only. If welding is required for your model of skid steer, please ensure that it is completed in a dry, safe environment. Also avoid assembly while the machine is running.

Step 1

Using a "lift apparatus", raise and tilt the stabilizer forward to allow the under-carriage pocket to rest along the back angle of the skid steer.

Step 2

With a standard welder, gently weld the edges of the under-carriage pocket to the back angle frame of the skid steer. Counterweight pins on the towers should be facing towards the rear. **Note: When welding, be sure that any inner fluid tanks are not damaged. We suggest you use a certified welder.**

Step 3

Attach the feed lines at the top of the left-hand tower and feed the hosing down the top of the loader arm or through the inside of the loader arm towards the front of the skid steer. ***Note: If feed lines are fed through the loader arm, than pre-drilled holes must be made on the front loader arm plate.**

Step 4

With the hosing provided, locate the two lengths of 3/8" hosing with 90˚ female JIC fittings. Using the shorter set of lines, attach to the fittings from one tower to the other. **Do not over tighten the fitting nut.** Attach lines to fittings on the towers: left to left and right to right. **Note: If feed lines are fed through the loader arm, than pre-drilled holes must be made on the front loader arm plate.**

Step 5

Attach the longer set of feed lines at the top of the left-hand tower and feed the hosing down the top of the loader arm. If you have a "Scissor Lift" design, run the hosing under and then over the loader arm. **Be careful not to pinch or scar the hosing.** Finally, attach ends of feed lines to the bulkhead bracket provided for the hydraulic couplers

***Special Note**

After your **Dutchman** stabilizer kit has been installed, proper service checks should be made to ensure that the kit functions properly and that all bolts, nuts, fittings, and clamps are secured tightly. We here at **Dutchman** believe the above instructions to be the safest and effective means of hook-up**.**

Any deviations or special preferences with regards to mounting can be made but only at the owner's risk.

Option 5 - New Holland L,LX, & LS 170-190 Series Skid Steers

Important Information

Your **Dutchman** Stabilizer Kit is designed to assist in providing maximum down pressure to the front loader arms of your skid steer while digging. Steps to assembly will require welding for Option 1 only. If welding is required for your model of skid steer, please ensure that it is completed in a dry, safe environment. Also avoid assembly while the machine is running.

Step 1

Your towers should already be bolted to the flange plates provided. Line up the towers near the rear of the skid steer using a floor jack. ***Note: the flange plate should be raised up until the footplate is almost touching the bottom edge of the skid steer body.** Once proper alignment has taken place, proceed to step 2.

Step 2

With a standard welder, **(We suggest you use a certified welder)** gently tack-weld the edges of the flange tubes to the frame of the skid steer (or mark accordingly). Counterweight pins on the towers should be facing towards the rear.

Step 3

With the hosing provided, locate the two lengths of 3/8" hosing with 90° female JIC fittings. Using the shorter set of lines, attach to the fittings from one tower to the other. **Do not over tighten the fitting nut.** Attach lines to fittings on the towers: left to left and right to right.

Step 4

Attach the longer set of feed lines at the top of the left-hand tower and feed the hosing down the top of the loader arm. If you have a "Scissor Lift" design, run the hosing under and then over the loader arm. **Be careful not to pinch or scar the hosing.** Finally, attach ends of feed lines to the bulkhead bracket provided for the hydraulic couplers

***Special Note**

After your **Dutchman** stabilizer kit has been installed, proper service checks should be made to ensure that the kit functions properly and that all bolts, nuts, fittings, and clamps are secured tightly. We here at **Dutchman** believe the above instructions to be the safest and most effective means of hook-up**.**

Any deviations or special preferences with regards to mounting can be made but only at the owner's risk.

Option 6 - Caterpillar A & B Track Series
(Note: Some Cat track units may follow Option 1 instructions)

Important Information

Your **Dutchman** Stabilizer Kit is designed to assist in providing maximum down pressure to the front loader arms of your skid steer while digging. Steps to assembly will require welding for Option 1 only. If welding is required for your model of skid steer, please ensure that it is completed in a dry, safe environment. Also avoid assembly while the machine is running.

Step 1

Remove rear skid steer bumper using a socket and a floor jack. Remove the harness bolts and remove the rear bumper out from the rear of the skid steer.

Step 2

Using a lift apparatus, raise and tilt the stabilizer forward to allow the union bar to fall into the existing bumper bracket.

Step 3

With the hosing provided, locate the two lengths of 3/8" hosing with 90˚ female JIC fittings. Using the shorter set of lines, attach to the fittings from one tower to the other. **Do not over tighten the fitting nut.** Attach lines to fittings on the towers: left to left and right to right. **Note: If feed lines are fed through the loader arm, than pre-drilled holes must be made on the front loader arm plate.**

Step 4

Attach the longer set of feed lines at the top of the left-hand tower and feed the hosing down the top of the loader arm. If you have a "Scissor Lift" design, run the hosing under and then over the loader arm. **Be careful not to pinch or scar the hosing.** Finally, attach ends of feed lines to the bulkhead bracket provided for the hydraulic couplers

Step 5

Using the **Dutchman Tree Spade**, or other hydraulic power source, feed the hydraulic fluid through and deploy the stabilizer legs. As the legs fall and hit the ground, allow the stabilizer to lift up so the union bar holes line up with the existing bumper holes.

Step 6

Using the floor jack, replace the rear bumper and insert the existing bumper bolts and nuts to hold the stabilizer into place. Once the bolts are tight and secure, raise the stabilizer legs and ensure that all bolts fittings and clamps are tight and secure.

***Special Note**

After your **Dutchman** stabilizer kit has been installed, proper service checks should be made to ensure that the kit functions properly and that all bolts, nuts, fittings, and clamps are secured tightly. We here at **Dutchman** believe the above instructions to be the safest and most effective means of hook-up**.**

Any deviations or special preferences with regards to mounting can be made but only at the owner's risk.

STEP
2. BOLT STABILIZERS TO WELDED ATTACHMENT BARS

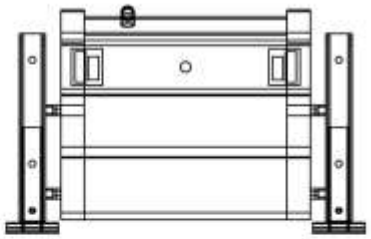

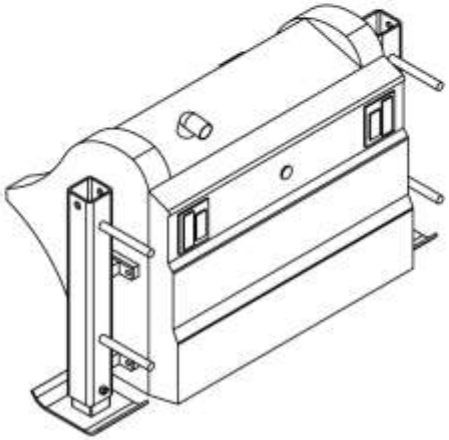

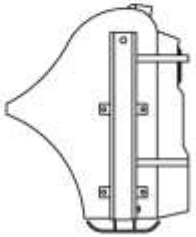

STEP
1. WELD ATTACHMENT BARS TO SKID STEER

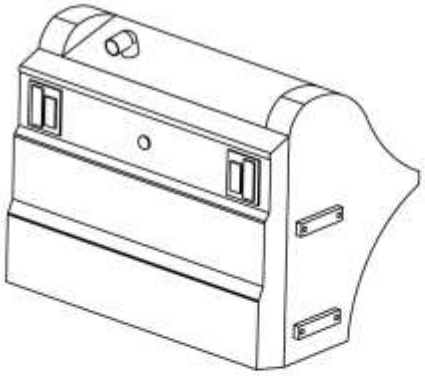

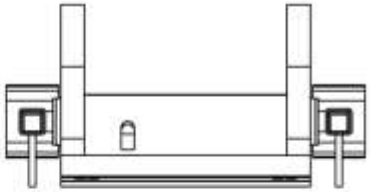

STANDARD TOLERANCES
UNLESS OTHERWISE SPECIFIED:

FRACTIONS	± 1/16
.X	± .030
.XX	± .010
.XXX	± .005
ALL ANGLES	± 2

MATERIAL

	NAME	DATE
DRAWN	A.F.	29/01/07
CHECKED		
ENG APPR.		
MFG APPR.		
Q.A.		

COMMENTS:

TITLE:
BOBCAT UNIVERSAL STABILIZER HOOK UP INSTRUCTIONS

SIZE A | DWG. NO. | REV

SCALE: | SHEET 1 OF 1

ALL DIMENSIONS ARE IN INCHES

DO NOT SCALE DRAWING

5 4 3 2 1

STEP
1. WELD ATTACHMENT BARS TO SKID STEER

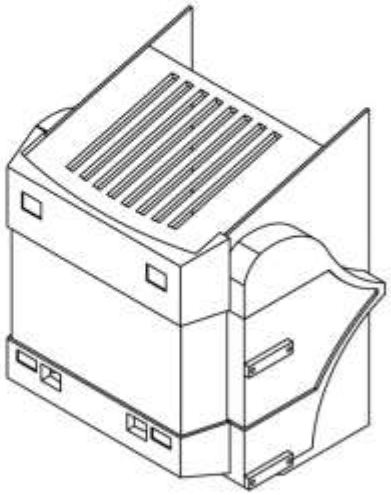

STEP
2. BOLT STABILIZERS TO WELDED ATTACHMENT BARS

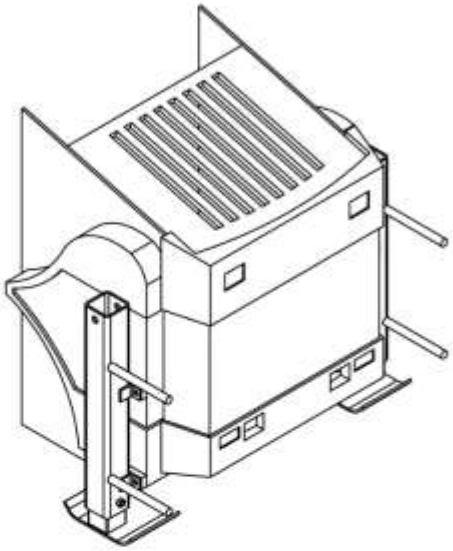

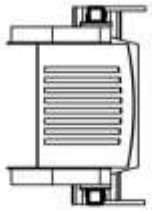

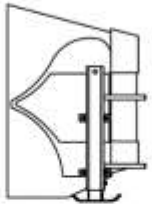

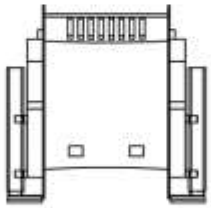

STANDARD TOLERANCES UNLESS OTHERWISE SPECIFIED:			NAME	DATE
FRACTIONS	± 1/16	DRAWN	A.F.	06/11/06
.X	± .030	CHECKED		
.XX	± .010	ENG APPR.		
.XXX	± .005	MFG APPR.		
ALL ANGLES	± 2	Q.A.		
MATERIAL		COMMENTS:		

TITLE: CAT/CASE/GEHL STABILZER HOOK UP INSTRUCTIONS

SIZE	DWG. NO.	REV
A		

SCALE: | SHEET 1 OF 1

ALL DIMENSIONS ARE IN INCHES

DO NOT SCALE DRAWING

5 4 3 2 1

STEP
1. REMOVE SKID STEER BUMPER

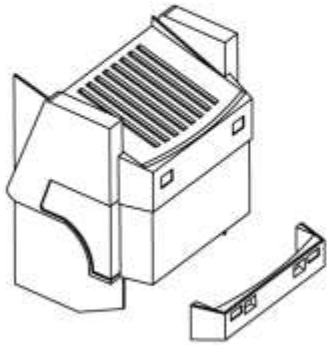

STEP
2. BOLT STABILIZER HOOK UP BAR TO SKID STEER

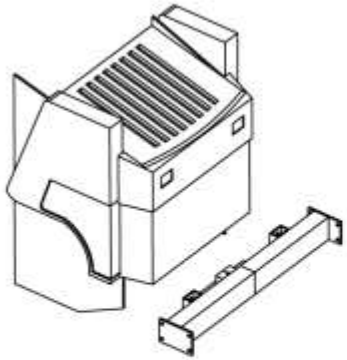

STEP
3. BOLT STABILIZERS TO HOOK UP BAR

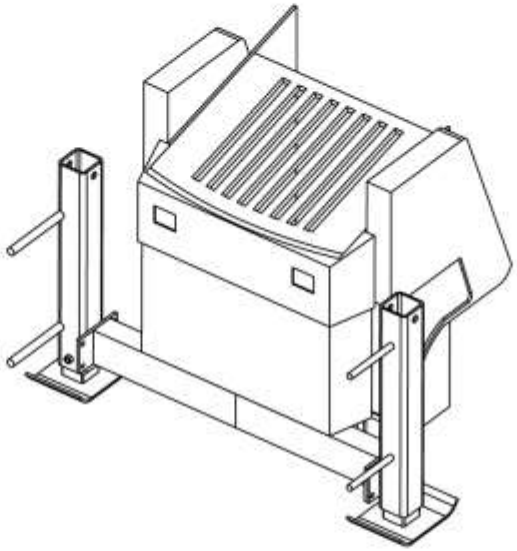

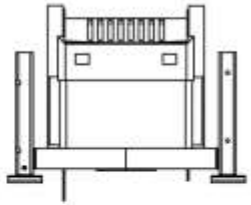

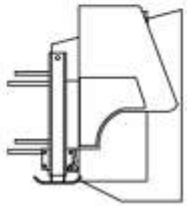

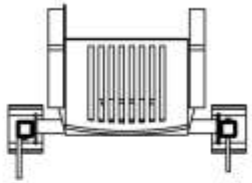

ALL DIMENSIONS ARE IN INCHES

STANDARD TOLERANCES UNLESS OTHERWISE SPECIFIED:

FRACTIONS	± 1/16
.X	± .030
.XX	± .010
.XXX	± .005
ALL ANGLES	± 2

MATERIAL

DO NOT SCALE DRAWING

	NAME	DATE
DRAWN	A.F.	03/11/06
CHECKED		
ENG APPR.		
MFG APPR.		
Q.A.		

COMMENTS:

TITLE: CAT 277/287 STABILZER HOOK UP INSTRUCTIONS

SIZE A | DWG. NO. | REV

SCALE: | SHEET 1 OF 1

5 4 3 2 1

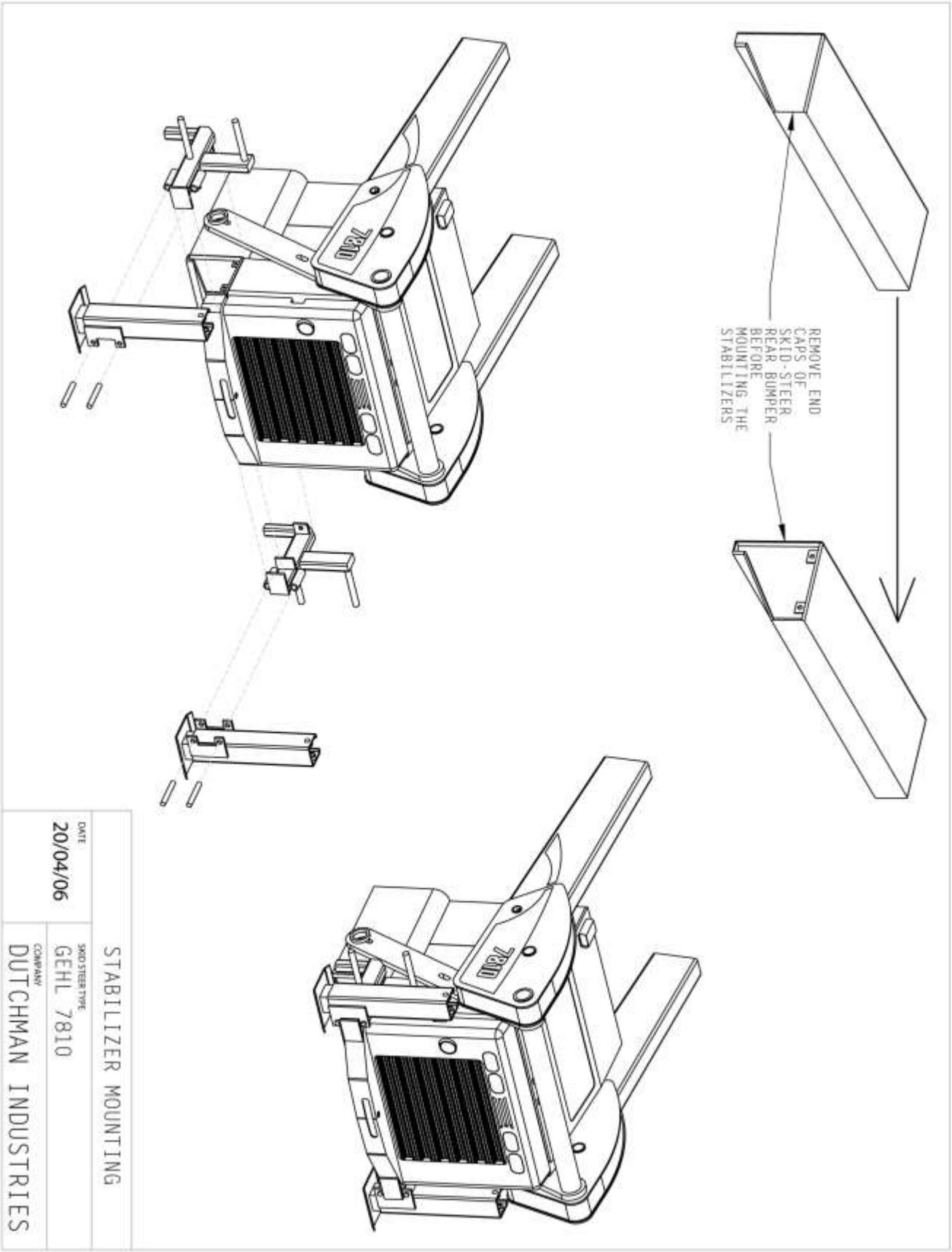
REMOVE END
CAPS OF
SKID-STEER
REAR BUMPER
BEFORE
MOUNTING THE
STABILIZERS
7810
7810
STABILIZER MOUNTING
SKID STEER TYPE
GEHL 7810
DATE
20/04/06
COMPANY
DUTCHMAN INDUSTRIES

STEP 2
2. BOLT STABILIZERS TO HOOK UP PLATE

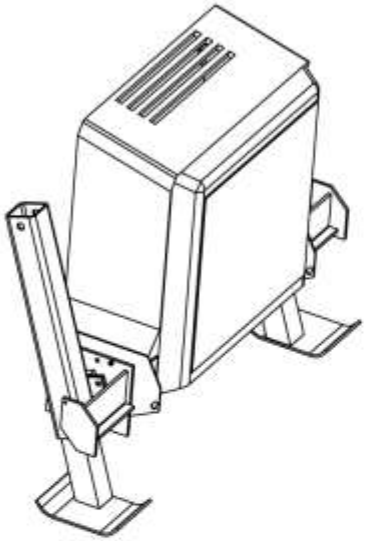

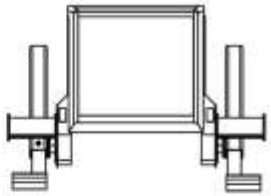

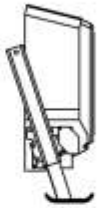

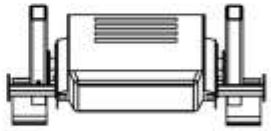

STEP 1
1. BOLT STABILIZER HOOK UP PLATE TO SKID STEER

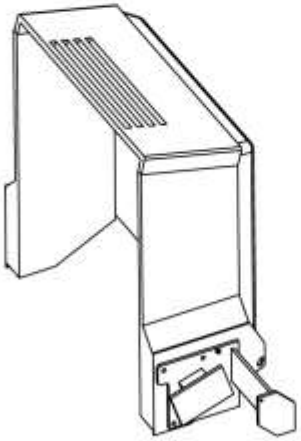

STANDARD TOLERANCES UNLESS OTHERWISE SPECIFIED:	
FRACTIONS	± 1/16
.X	± .030
.XX	± .010
.XXX	± .005
ALL ANGLES	± 2

MATERIAL

	NAME	DATE
DRAWN	A.F.	3/11/06
CHECKED		
ENG APPR.		
MFG APPR.		
Q.A.		

COMMENTS:

TITLE:
JOHN DEERE 325 STABLIZER HOOK UP INSTRUCTIONS

SIZE A | DWG. NO. | REV

SCALE: | SHEET 1 OF 1

ALL DIMENSIONS ARE IN INCHES

DO NOT SCALE DRAWING

5 4 3 2 1

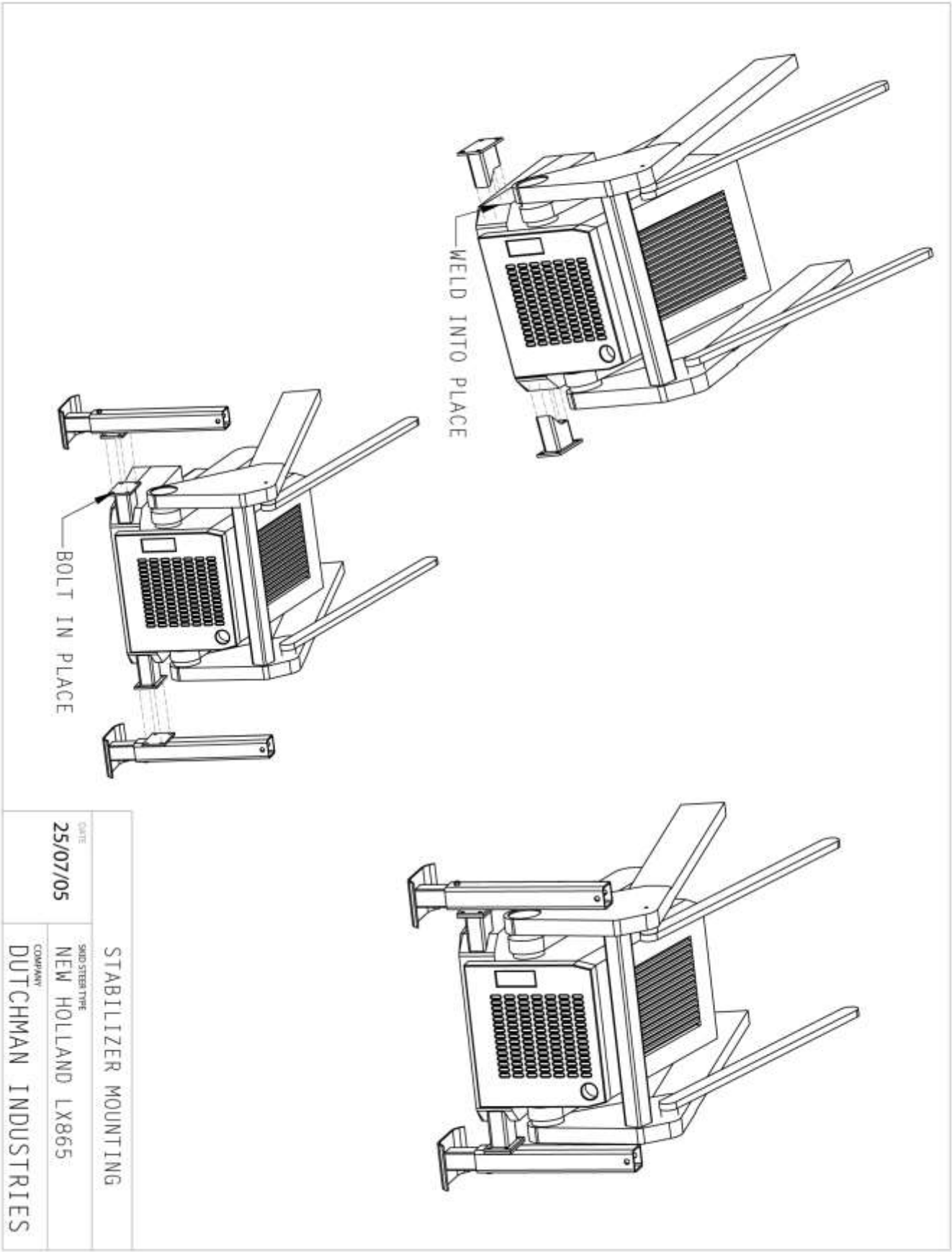
WELD INTO PLACE
BOLT IN PLACE
STABILIZER MOUNTING
SKID STEER TYPE
NEW HOLLAND LX865
DATE
25/07/05
COMPANY
DUTCHMAN INDUSTRIES

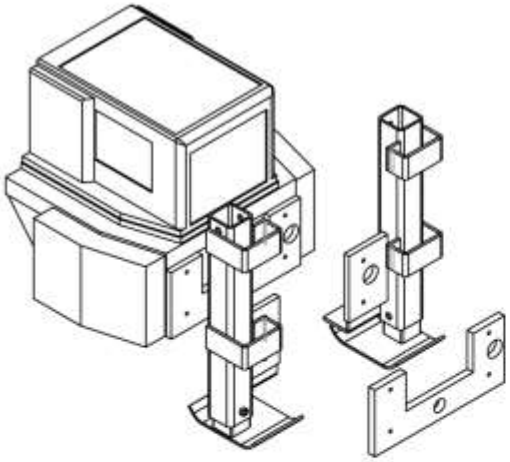

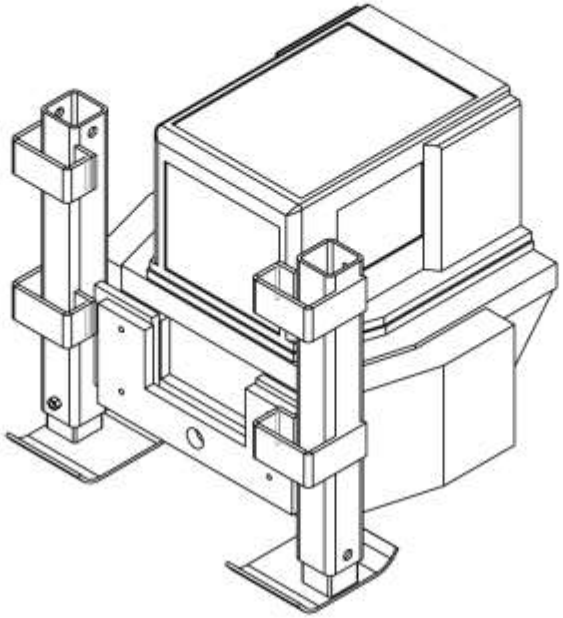

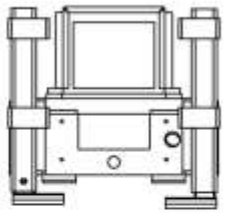

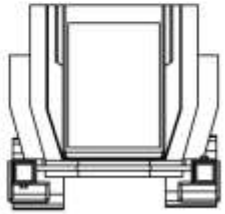

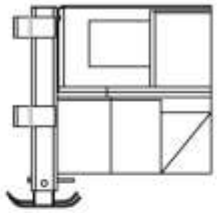

PROPRIETARY AND CONFIDENTIAL

THE INFORMATION CONTAINED IN THIS DRAWING IS THE SOLE PROPERTY OF DUTCHMAN INDUSTRIES INC. ANY REPRODUCTION IN PART OR AS A WHOLE WITHOUT THE WRITTEN PERMISSION OF DUTCHMAN INDUSTRIES INC. IS PROHIBITED.

ALL DIMENSIONS ARE IN INCHES

STANDARD TOLERANCES UNLESS OTHERWISE SPECIFIED:

FRACTIONS	± 1/16
.X	± .030
.XX	± .010
.XXX	± .005
ALL ANGLES	± 2

MATERIAL

DO NOT SCALE DRAWING

	NAME	DATE
DRAWN	A.F.	06/11/06
CHECKED		
ENG APPR.		
MFG APPR.		
Q.A.		

COMMENTS:

TITLE: NH ASV (TRACK) STABILZER HOOK UP INSTRUCTIONS

SIZE A | DWG. NO. | REV

SCALE: | SHEET 1 OF 1

5 4 3 2 1

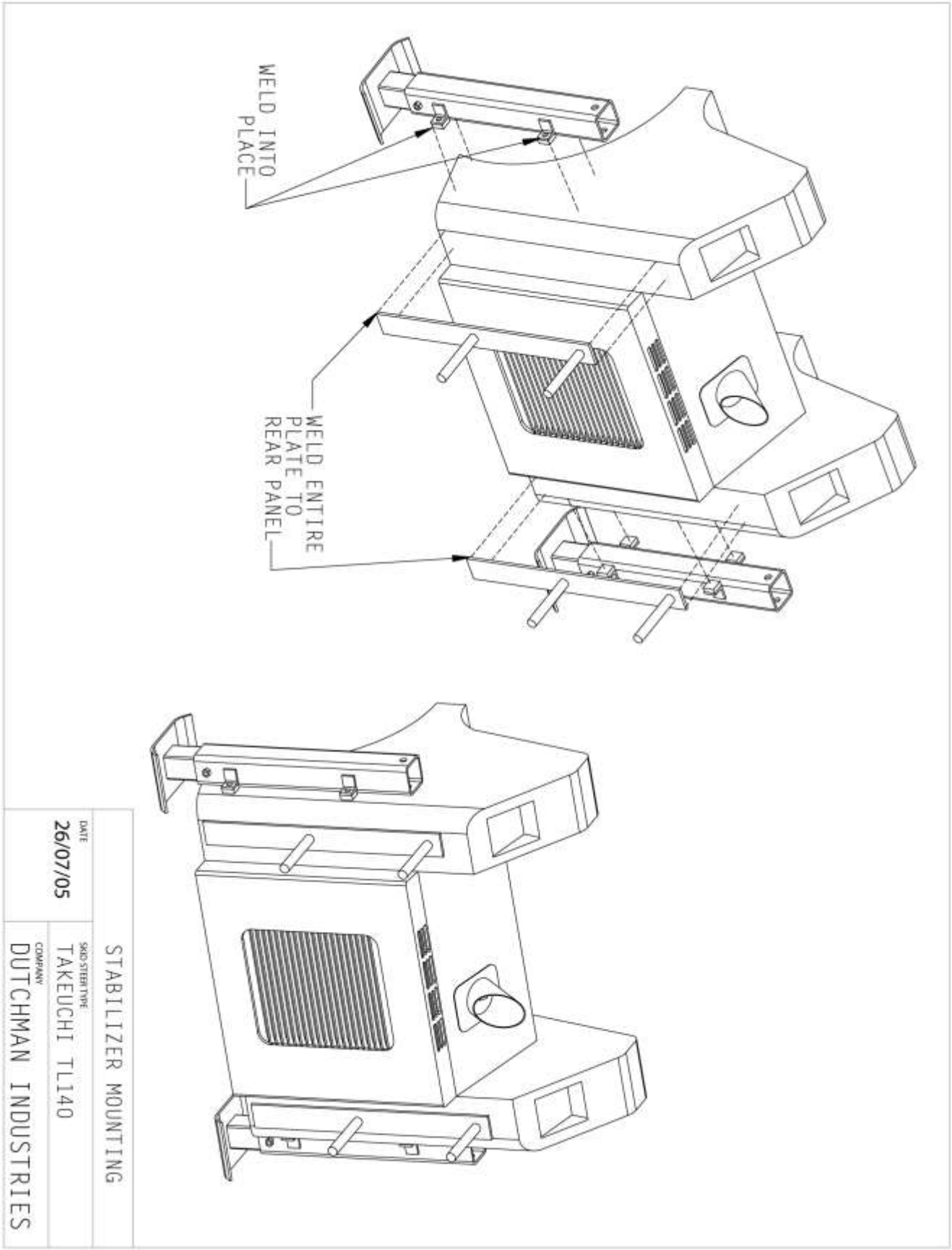
WELD INTO PLACE
WELD ENTIRE PLATE TO REAR PANEL
STABILIZER MOUNTING
SKID STEER TYPE
TAKEUCHI TL140
DATE
26/07/05
COMPANY
DUTCHMAN INDUSTRIES

DUTCHMAN PISTOL GRIP JOYSTICK

MOUNTING INSTRUCTIONS

DUTCHMAN INDUSTRIES INC.

PISTOL GRIP JOYSTICK MOUNTING

➔ WARNING: Always ensure that the vehicle is shut-down and all power is off before beginning installation of the pistol grip joy stick.

Before beginning installation of the pistol grip joystick, check to see if it will be necessary to remove the 9-pin receptacle plug for wiring. Mounting the joystick on a skid steer or track loader according to the instructions below typically requires removing the receptacle. If it is necessary to remove the receptacle, do so before continuing to mounting.

9-PIN PLUG

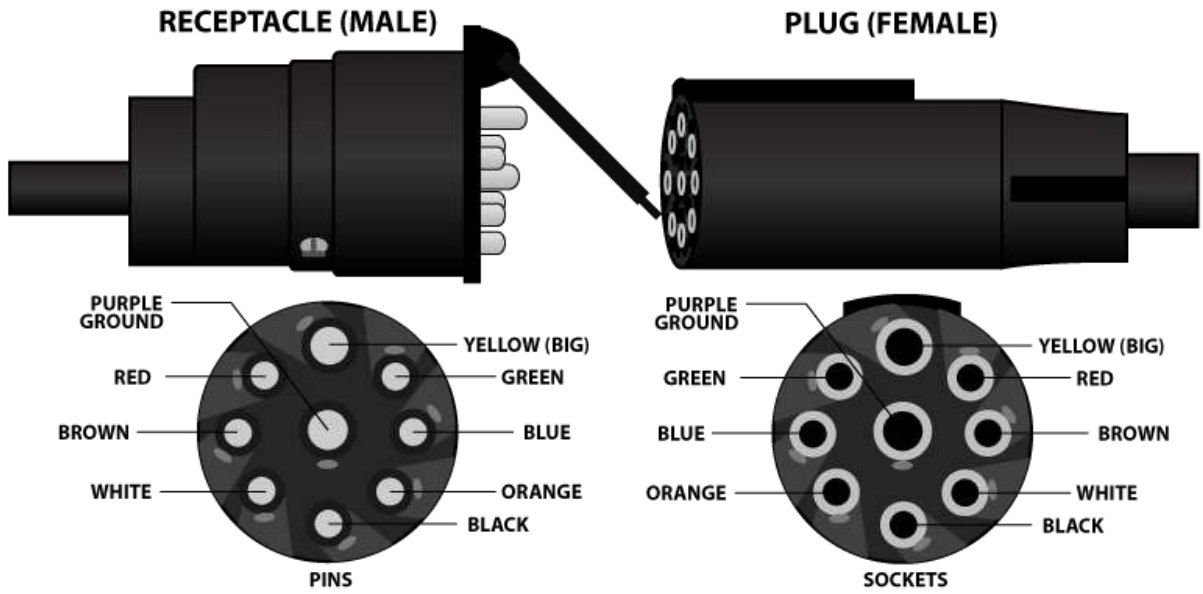

SKID STEER/TRACK LOADER MOUNTING

Before mounting the pistol grip onto your loader, be certain you have decided exactly what side (left or right) you prefer. Since all loader handles have a multi-button control system, the pistol grip joystick cannot simply replace an existing handle because of the loss of too many functions. To alleviate this problem, your pistol grip joystick will have included an "adapting bracket." Simply attach the bracket to the side of the desired handle. **Be sure to screw your joystick into the adapting tube before mounting to test the placement.** Clamp down the bracket and tighten it securely. This system will still allow you to operate your loader arms because the pistol grip now becomes an extension of the previous handles.

The pistol grip has an extra wire along with the positive and negative end, approximately 12 inches down from the handle base. This auxiliary wire can be used as a hook-up for any kind of 12-volt, 5-amp external device. If no external device needs to be added, it may be left alone in place.

When the wiring in the cab is complete, allow the cable to run out the back of the skid steer cab and onto the back loader arm. Run the cable down towards the front of the loader arm and attach to the receptacle plug bracket. See the diagram on the next page for an example. Clip cables down as desired and find a positive and negative connection in your skid steer.

SKID STEER WIRING DIAGRAM

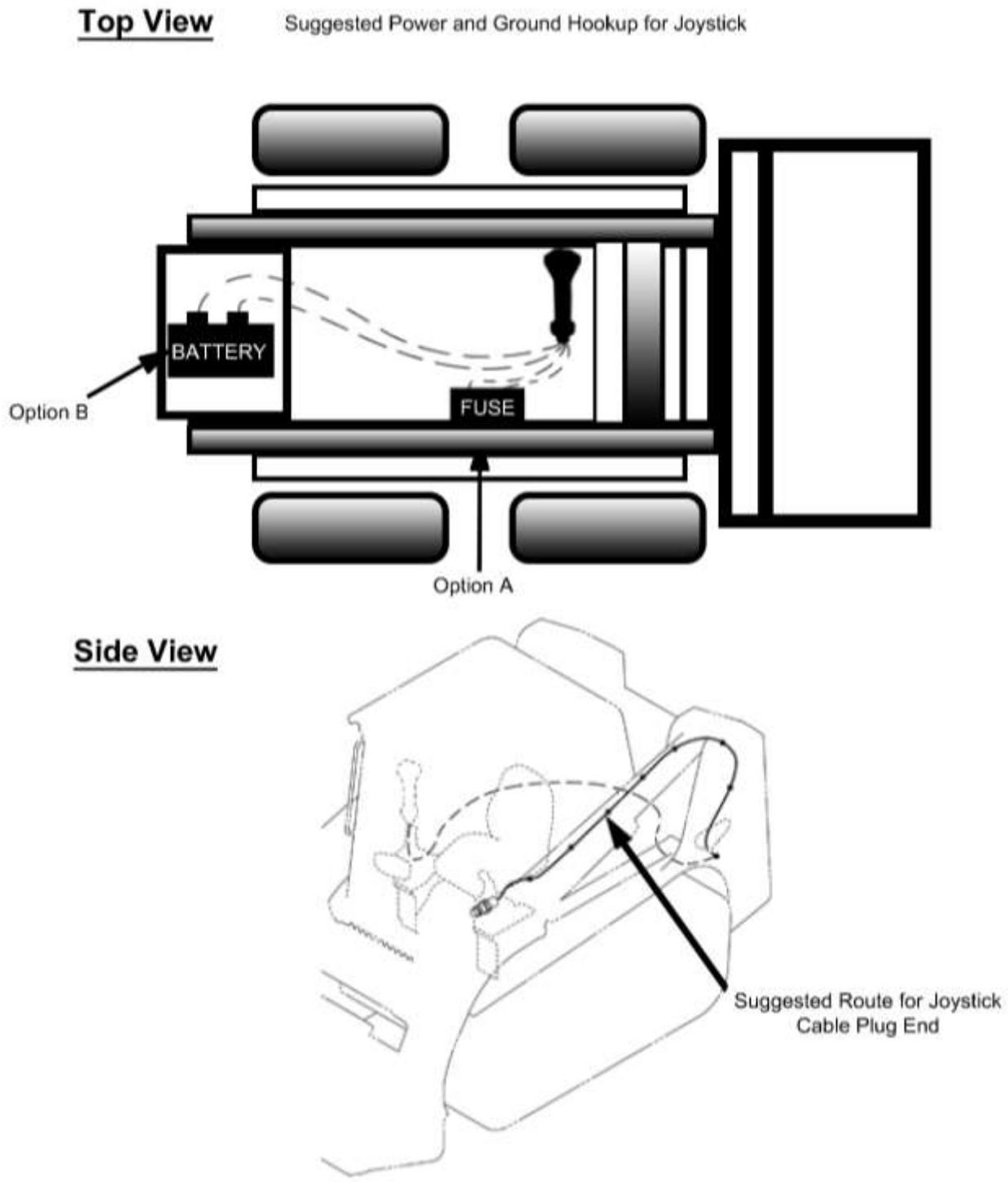

ARTICULATED LOADER/EXCAVATOR MOUNTING

All loaders and excavators will have a mounting system similar to the skid steer/track loader mounting above. Once your pistol grip has been installed, run your cable out of the front of the cab and down your loader arm. This may mean that you have excess cable. Tie up any excess cable in a safe location inside the loader cab to avoid pinching or damage. **Be sure your cable is secured to so that it is not subject to pinching or cutting by the loader bucket.** The way the cable runs out of the cab is up to the end user's preference.

NOTE: After your Pistol Grip Joystick has been installed, proper service checks should be made to ensure that the joystick is functioning properly. Also make sure you have a solid positive and negative connection. A bad connection will not allow the piece of equipment to function.

EXCAVATOR WIRING DIAGRAM

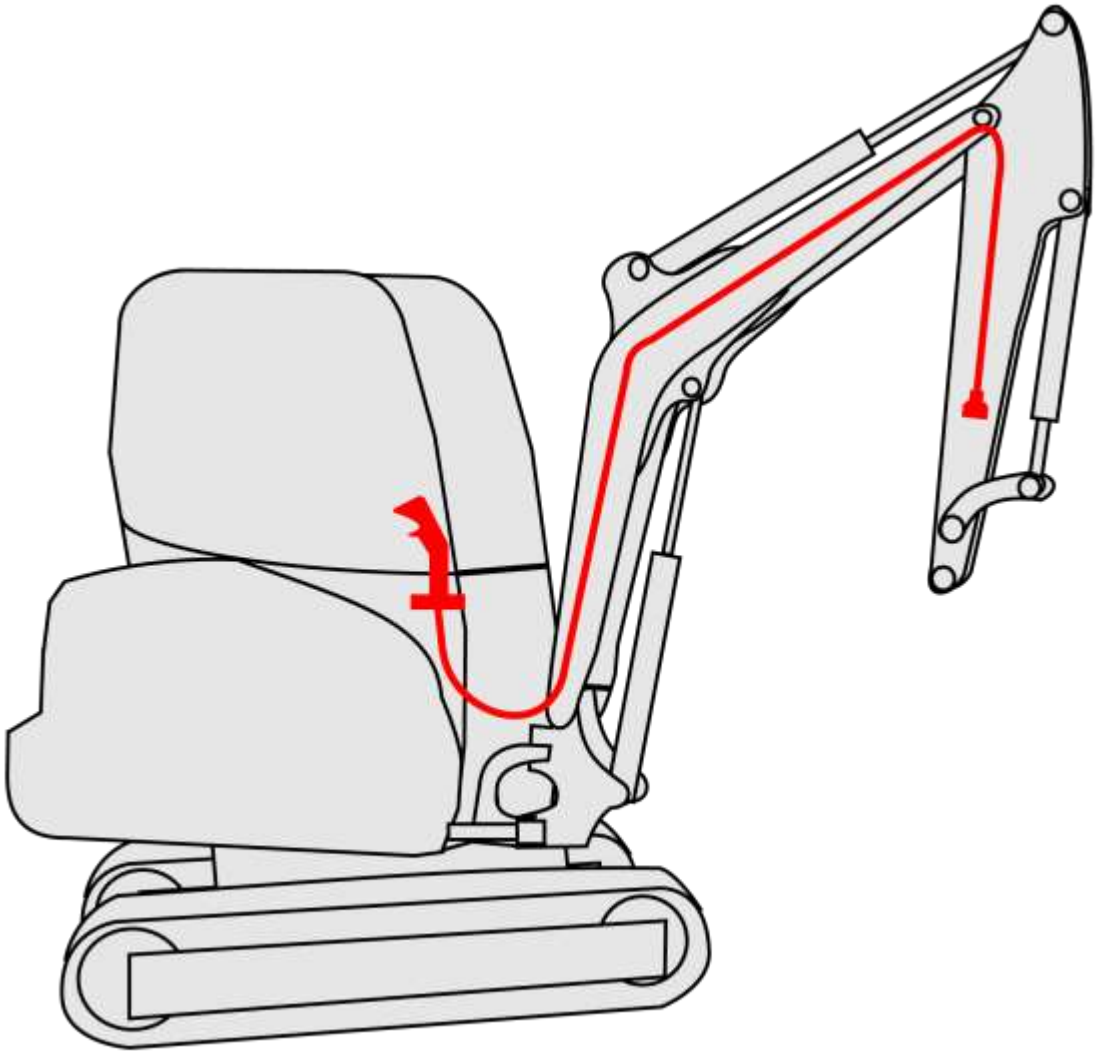

WHEEL LOADER WIRING DIAGRAM

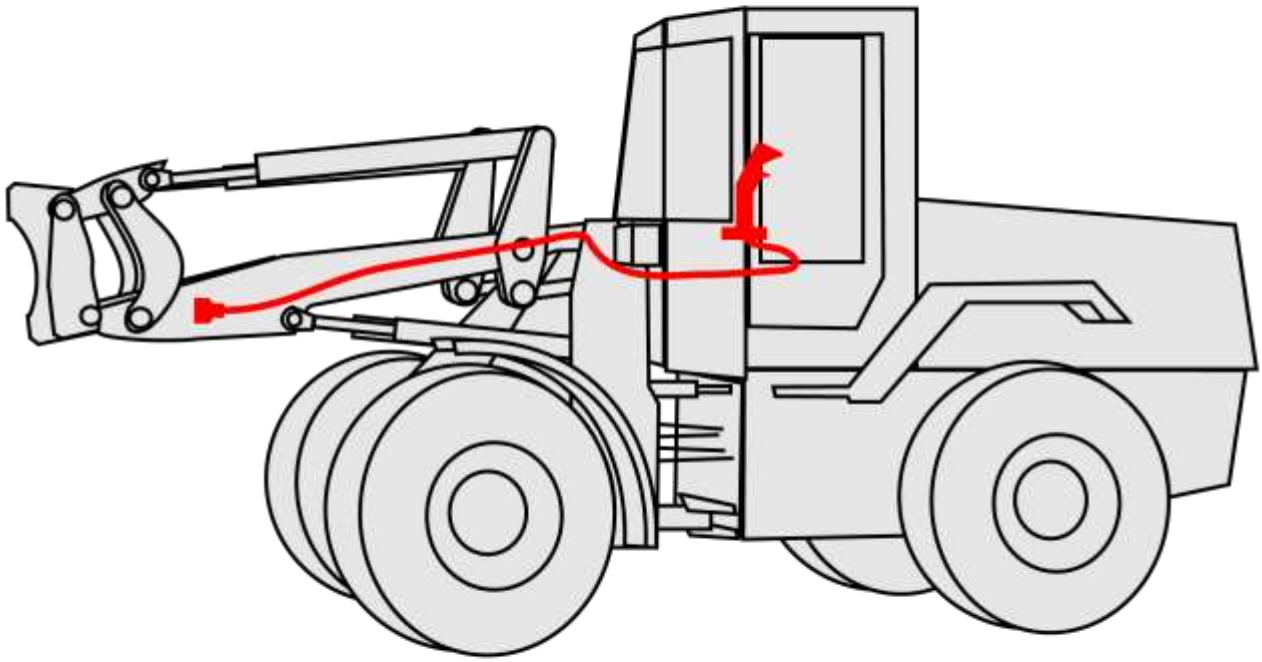

PISTOL GRIP SCHEMATICS

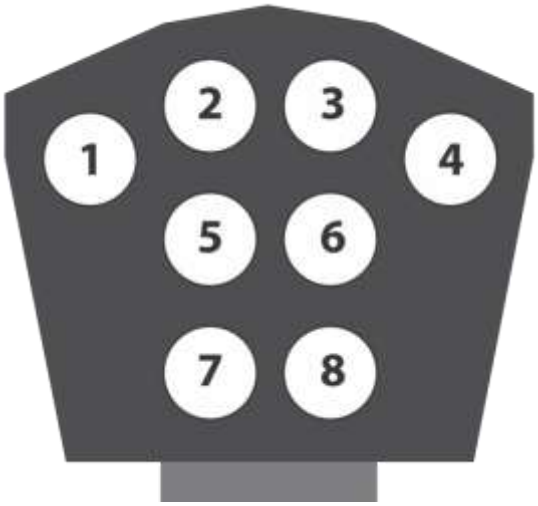

Button Position	Wire Colour
1	Yellow
2	Green
3	Blue
4	Orange
5	Black
6	White
7	Brown
8	*Auxiliary*

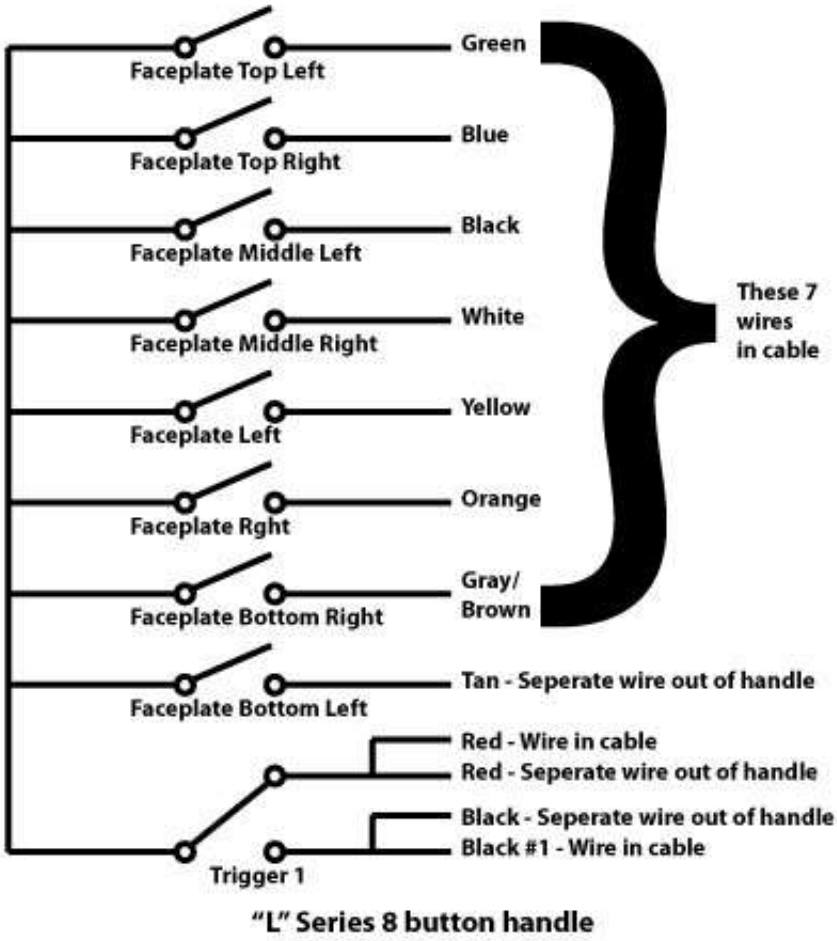

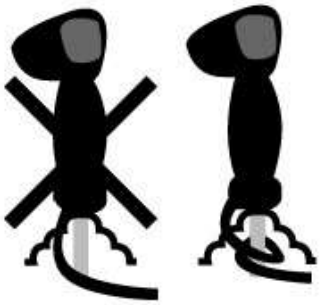

Most wire breakage problems can be traced back to two common installation mistakes.

Crushing the wire: Nylon tie wraps are very useful in giving the wire harness a neat and finished appearance, but applying them too tightly can crush the wire insulation and pinch the wires. When the cable is pinched, it doesn't allow the wire to slide inside the cable jacket which creates a stress point.

Forcing the wire to flex at one point: If the wire from the control handle is routed down the joystick shaft with little slack the wire will tend to flex over a small area. Eventually the repeated flexing will cause the wire strands to break. The solution is to provide enough slack in the cable to the flexing motion is distributed over a longer section of wire.

PISTOL GRIP SCHEMATICS & PARTS LIST

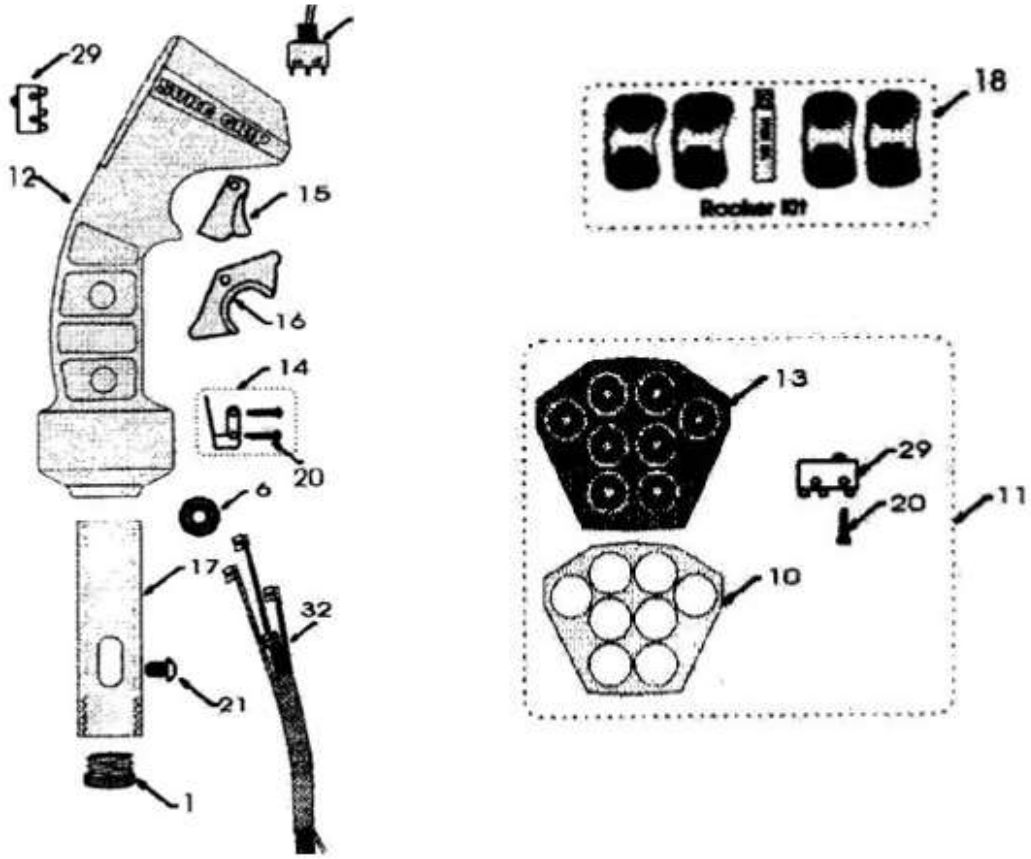

#	Part	Description	#	Part	Description
1	BU-00	5/16 Unthreaded Bushing	14	L6-01	Leaf Spring Kit
	BU-01	10 mm X 1.25 Bushing	15	L-TR-01	Single Trigger
	BU-02	12 mm X 1.25 Bushing	16	L-TR-02	Double Trigger
	BU-03	12 mm x 1.75 Bushing	17	PN-03	Mounting Pin
	BU-04	14 mm X 2 Bushing	18	RK-02	Rocker Lid
	BU-05	5/6” NC Bushing	20	SC-03	#2 X7/16” Self-Tapping Screw
8	GR-01	Wire Grommet	21	SC-02	10 – 32 X 3/8” Screw
10	L-FP-01	“L” Series Empty Faceplate	29	SW-00	Switch (Faceplate or Trigger)
11	L-FP-A8	8 Function Switch Pack Assy	31	T0-2MA	Toggle (on/off)
12	L-HL-01	Handle Case - left		T0-3M0	Toggle (on)/off/(on)
	L-HL-02	Handle Case – right	32	L1M8-W	Harness (Single Trigger)
13	L-ME-A8	5 Button Overlay		L2M6-W	Harness (Double Trigger)

Dutchman Industries Inc.

W A R R A N T Y

Dutchman Industries Inc., herein referred to as DMI, warrants each new industrial product of its own manufacture to be free from defects in material and workmanship, under normal use and service for one(1) full year after delivery to the owner.

During the warranty period, the authorized selling DMI Dealer shall furnish parts without charge for any DMI product that fails because of defects in material and/ or workmanship. This warranty and any possible liability of DMI hereunder is in lieu of all other warranties express, implied or statutory, including but not limited to any warranties of merchantability or fitness for a particular purpose.

The parties agree that the Buyer's SOLE AND EXCLUSIVE REMEDY against DMI, whether in contact or arising out of warranties, representations, instructions, or defects shall be for the replacement or repair of defective parts as provided herein. The Buyer agrees that no other remedy (including, but not limited to, incidental or consequential loss) shall be available to them. If, during the warranty period, any product becomes defective by reason of material or workmanship and the Buyer immediately notifies DMI of such defect, DMI shall, at its option, supply a replacement part or request return of the product to its plant in Brougham, Ontario, Canada. No parts shall be returned without prior written authorization from DMI, and this warranty does not obligate DMI to bear any transportation charges in connection with the repair or replacement of defective parts. DMI will not accept any charges for labour and/or parts incidental to the removal or remounting of parts repaired or replaced under this Warranty. **A formal, faxed estimate to DMI is required prior to any foreseen warranty repairs, alterations and/or labour.**

This Warranty shall not apply to any part or product which have been installed or operated in a manner not recommended by DMI; nor to any part or product that has been neglected or used in any way, which in the Manufacturer's opinion, adversely affects its performance; not negligence of proper maintenance or other negligence, fire or other accident; not with respect to wear items included but not limited to items such as tree spade blades and wear strips; nor if the unit has been altered or repaired outside of a DMI authorized dealership in a manner of which, in the sole judgment of DMI affects its performance, stability or reliability. Equipment and accessories not of DMI manufacture are warranted only to the extent of the original Manufacturer's Warranty and subject to their allowance to DMI, if found defective by the original Manufacturer.

DMI reserves the right to modify, alter and improve any product or part without incurring any obligation to replace any product or parts previously sold with such modified, altered, or improved product or part.

No person is authorized to give any other Warranty or to assume any additional obligation on the behalf of DMI unless made in writing and signed by an officer of DMI.